Cat. No. 014E·11-2024

OIL SEALS

NOK CORPORATION

Globally Recognized World Class Quality

The NOK Oil Seal Division, which is a production base for oil seals, has obtained ISO 9001 certification, an international quality standard.
We will continue to supply products that meet our customers' needs and strive to further improve our quality so that we can earn even higher levels of trust than ever before.

NOK Oil Seals Division: ISO 9001 certified (in May, 1998)

[NOK Oil Seals Division] 8 Tsuzukibori, Nagaikawa, Fukushima City, Fukushima Prefecture, JAPAN

The range of use, performance data and numerical values described in this catalog are guidelines for selection, and in actual use, general specifications may not apply due to unknown factors and restrictions due to circumstances.
Check the suitability of each product before use.
The accuracy of data other than that provided by our company can not be guaranteed.

OIL SEALS

[Contents]

Pages

1. WHAT IS AN OIL SEAL? 2
2. THE SEALING MECHANISM OF AN OIL SEAL 5
3. OIL SEAL TYPES 7
4. OIL SEAL MATERIALS 20
5. OIL SEAL APPLICATION GUIDE 24
6. HOUSING AND SHAFT DESIGN GUIDE 30
7. OIL SEAL STORAGE PRECAUTIONS, STORAGE TIME AND HANDLING GUIDE 44
8. SEAL LEAKAGE TROUBLESHOOTING GUIDE 53
9. SERVICE LIFE OF AN OIL SEAL 59
10. FRICTIONAL TORQUE OF AN OIL SEAL 61
11. OIL AND CHEMICAL RESISTANCE RATINGS OF LIP MATERIALS 62
12. APPENDED CHART 80
13. KLÜBER LUBRICANTS FOR OIL SEAL USE 87
14. TYPE & SIZE LIST OF OIL SEALS 89
    - STANDARD OIL SEALS
        - **SC type** 90
        - **SB type** 99
        - **TC type** 108
        - **TB type** 116
        - **TCK type** 122
        - **VC type** 123
        - **VB type** 123
        - **KC type** 128
        - **KB type** 128
        - **TCZ type** 129
        - **TCV type** 130
        - **TCN type** 131
        - **TC4 type** 132
        - **TB4 type** 132
    - GENERAL OIL SEALS
        - **OC type** 134
        - **QLFY type** 135
        - **VR type** 136
        - **SBB type** 138
        - **Large-diameter SB type** 138
        - **Large-diameter TB type** 143
        - **MG type** 144
    - PTFE SEALS
        - **TCJ type** 146
        - **SA1J type** 147
        - **VAJ type** 147
        - **KA3J type** 147
    - SUS SPRING SPECIFICATION OIL SEALS 148
    - Le-μ's: LOW FRICTION(μ) SEALS 152

High-performance brand that contributes to the environment through low-friction technologies

- In this Catalog, both the International System of Units (SI) and the conventional system of units are used.
- The notation of surface roughness on the catalog comply with JIS B 0601: 2001

Catalogues of models **ZF** and **ZT** type were discontinued at the end of September 2024.
Details of product specifications and handling are provided in the same manner as for other general oil seal catalogs.

1. WHAT IS AN OILSEAL?

Simply stated, oil seals are components of a machine that seal lubricants.
Lubricants are used in the friction-producing areas of a machine to ensure smooth movement and long life, and oil seals are used to prevent this lubricant from leaking through "gap" of the machine.
With advances in mechanical engineering, it has become necessary to prevent the leakage of not only lubricants but also water or chemicals, as well as preventing the entry of dust and dirt into the machine. Oil seals are used to perform both functions.

O rings, lip packings, gland packings, and mechanical seals function in similar ways lo oil seals, as shown in Fig.1-1. Oil seals are most often used in rotating shaft applications.

The function of an oil seal is easily understood by examining a familiar example: the automobile. Fig.1-2 shows oil seals used in automobile engines. In such engines, the reciprocating motion of the pistons is converted into the rotary motion of the crankshaft by the connecting rods. The crankshaft is supported by metal bearings. To lubricate these metal bearings, and other areas where metal and metal slide against each other, engine oil is filled in the oil pan. Since the oil pan is secured to the crankcase, "gap" is needed between the fixed crank case and the rotating crankshaft.
An oil seal is a sealing device that prevents the leakage of engine oil from the bearing clearance between the rotating crankshaft and crankcase, or the bearing clearance between a reciprocating shaft and crankcase. Fig.1-3 shows oil seals typically used in a geared motor.

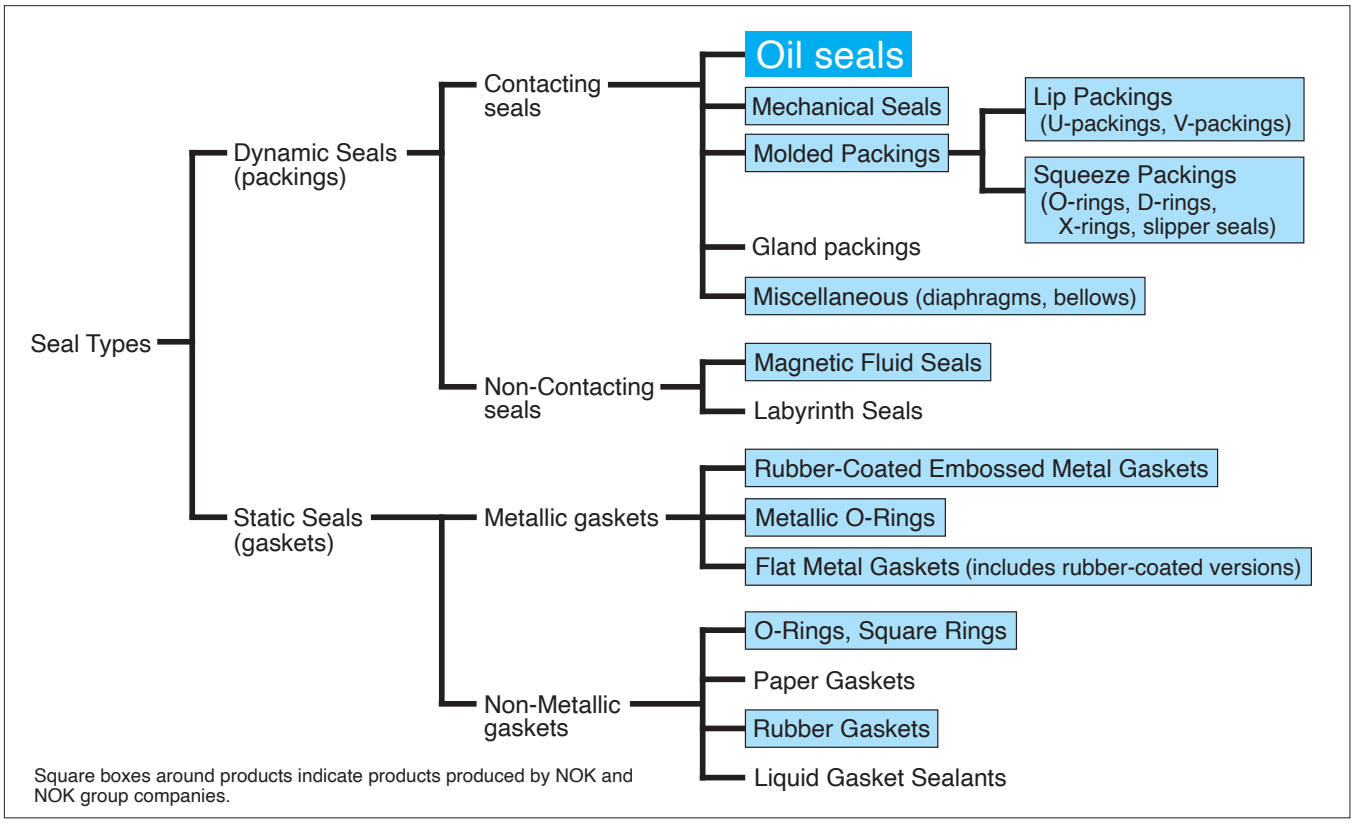

Fig. 1-1 Seal Classifications

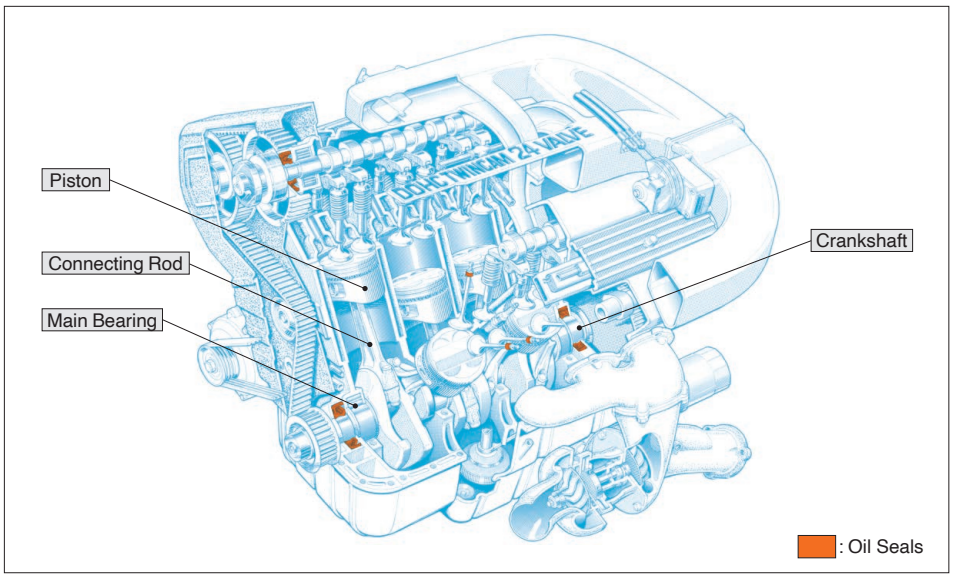

Fig. 1-2 Oil Seals In a Typical Engine Application

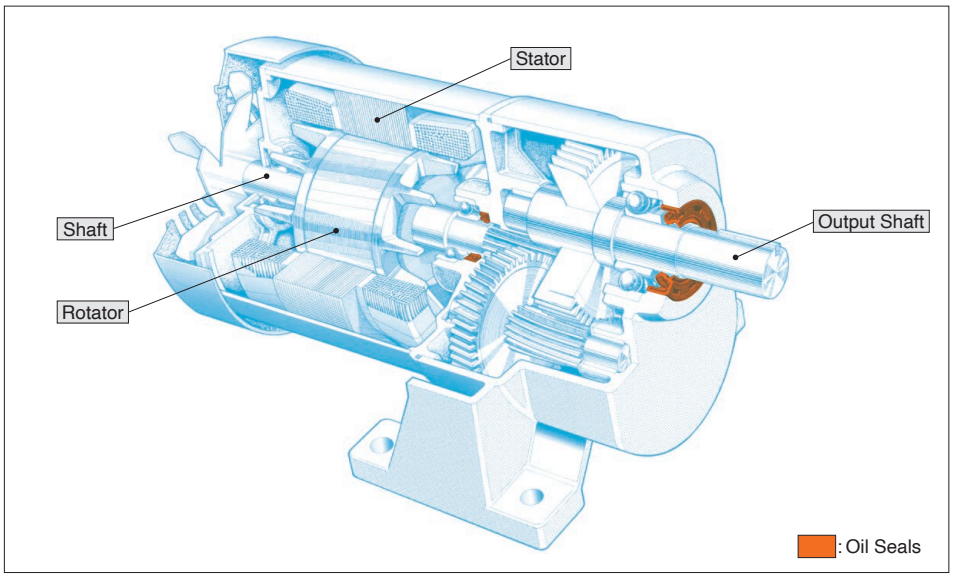

Fig. 1-3 Oil Seals Used in a Typical Geared Motor

(1) Functional Explanation of an Oil Seal

Fig. 1-4 shows the exterior features of a typical oil seal. and Table.1-1 describes the function of each part of an oil seal.

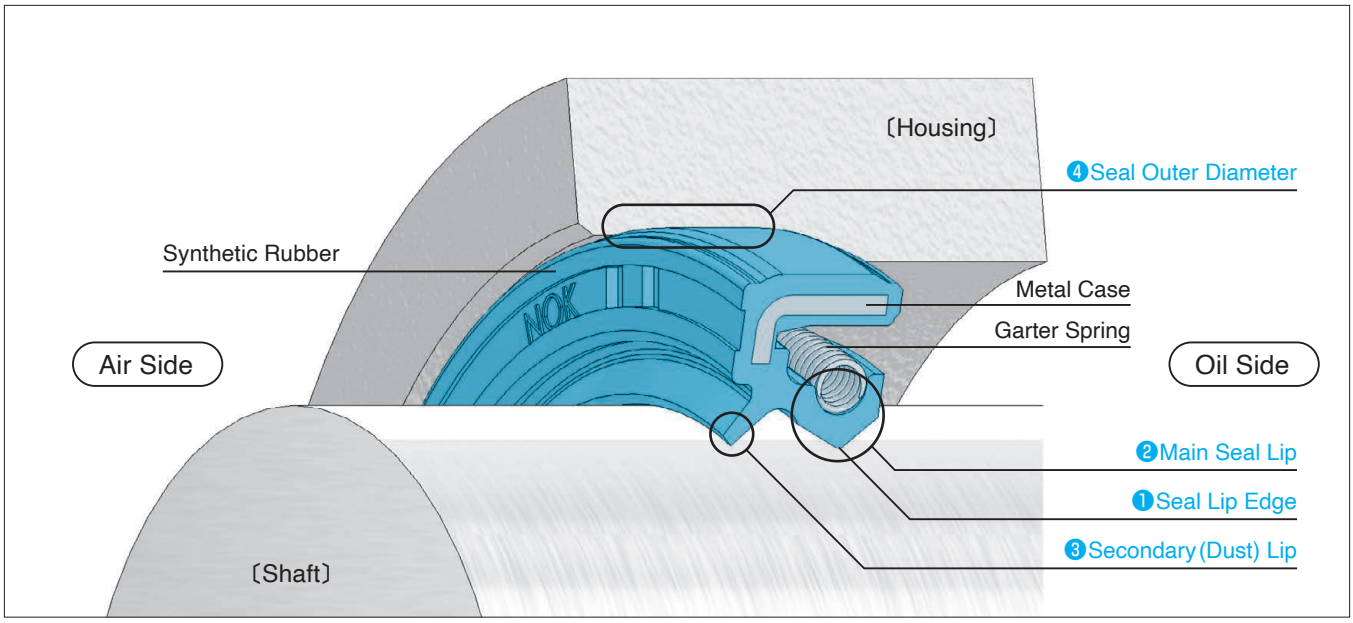

Fig. 1-4 Basic Features of an Oil Seal

Table 1-1 Functions of each Oil Seal Area.

	Part Name		Part Name
❶	Lip Area	Seal Lip Edge (shaft contact)	The seal lip has the cross-sectional profile of a wedge, and it presses down onto the shaft surface to seal in fluid.
❷	Lip Area	Main Seal Lip	The seal lip is made of a flexible synthetic rubber and is designed to maintain stable shaft contact and sealing even with machine vibration and fluid pressure fluctuation. A garter spring adds to the radial load and helps keep the sealing edge in proper contact with the shaft.
❸	Lip Area	Secondary (Dust) Lip	A dust lip is an auxiliary spring-less lip, and acts to prevent dirt ingestion.
❹		Seal Outer Diameter	The seal OD creates a press-fit to the housing bore, thus retaining the seal and preventing fluid escape. An internal metal case provides a solid backbone for rigidity.

(2) Oil Seal Manufacturing Process

Inspections are conducted at each individual process and only those parts that pass inspections are allowed to proceed to the subsequent process.
We have established a traceability system that allows us to track parts based on their lot number during each process starting from the acceptance of raw materials leading up to delivery.

Oil seals consist of 3 basic components.

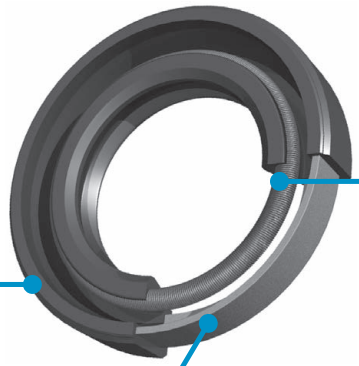

Rubber

①Blending/kneading process

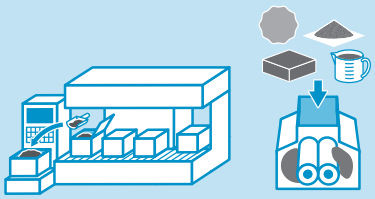

②Material cutting process

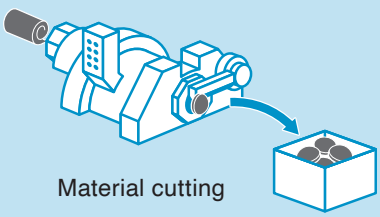

Metal Case

①Press machining

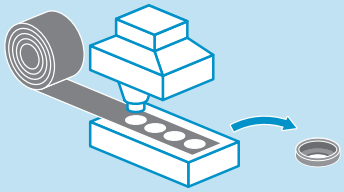

②Surface treatment/adhesion

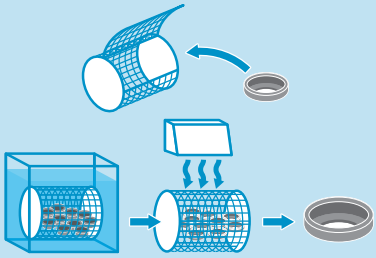

Surface treatment: Degreasing⇒ chemical conversion⇒drying
Adhesion: Immersion⇒hot-air drying⇒baking

Garter Spring

①Winding

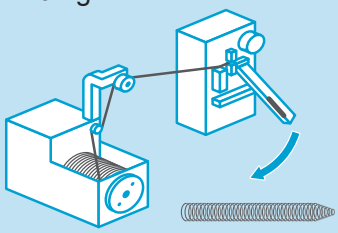

②Joint

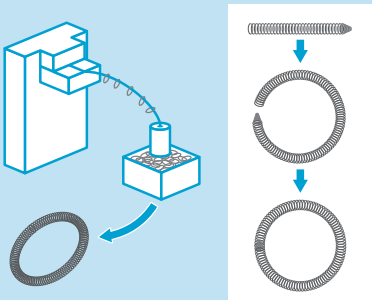

Material process completed
To vulcanization molding process

Metal case process completed
To vulcanization molding process

Garter spring process completed
To spring loading machine process

Vulcanization and finishing processes

①Vulcanization molding

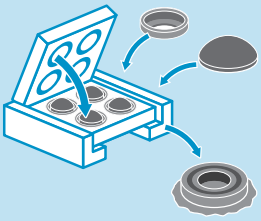

The metal case and material are loaded into a press machine for vulcanization molding.

②Finishing process

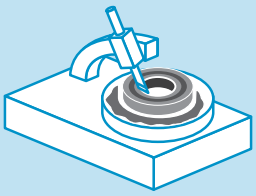

Finishing with special cutting tool.

③Garter spring loading/ inspection/greasing

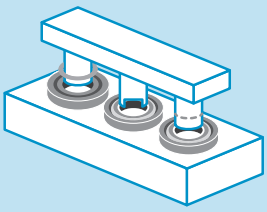

Insperction and grease filling after Spring loading.

④Final inspections/ shipment

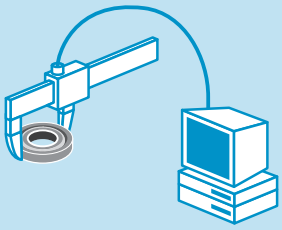

Oil seals that pass final inspections are shipped.

2. THE SEALING MECHANISM OF AN OIL SEAL

How do oil seals actually seal fluid? Due to the continuing efforts of many scholars and researchers, the fundamental sealing mechanism of oil seals has been almost completely illuminated.
NOK announced a sealing theory in 1959, followed by the release of numerous technical publications to the Japan Society of Mechanical Engineers, the Japan Lubricator Makers Association, the Society of Automotive Engineers in the United States (SAE), and the British Hydrodynamics Research Association (BHRA). This theory has earned an excellent reputation among researchers and related industrial societies as being an accurate representation of seal function.
In this chapter, the lubrication factors and sealing mechanism of oil seals are briefly described based on the NOK sealing theory.

(1) Lubrication Characteristics

Oil seals used in machines play a major role in sealing fluid, whether the machine is stopped or a shaft is in motion. One of the important characteristics is that the lip section has less friction and wear.
What lubrication factors of the seal lip's contact edge affect the life of an oil seal? These factors are explained in view of a seal's macroscopic phenomena. To understand these lubrication factors, it is important to evaluate the seal's frictional properties. For this reason, we placed seals in a test machine, as shown in Fig. 2-1, and measured rotational friction forces by turning the shaft under various conditions.

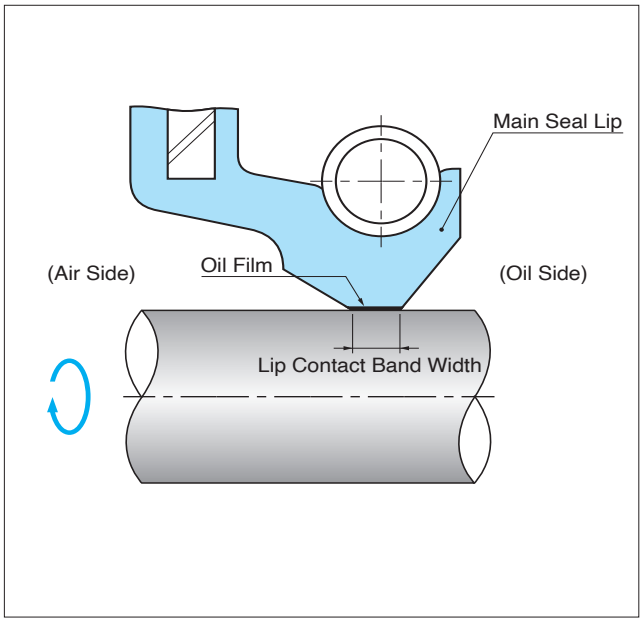

Fig. 2-1 An Oil Seal Installed in a Friction Test

Fig. 2-2 shows the relationship between the non-dimensional duty parameter, G (which is determined by the shape of the oil seal and conditions of use), and the coefficient of friction, f.

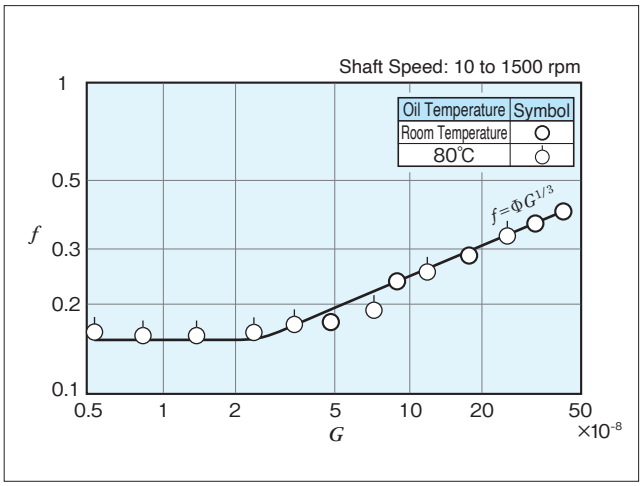

Fig. 2-2 Friction Characteristics of Rotating Shaft Oil Seals (f vs. G plot)

Here, the relationship between the coefficient of friction, f, and the non-dimensional duty parameter, G, is given (1).

$$f=\Phi G^{1/3} \cdots\cdots (1)$$

Where
f = Coefficient of Friction
Φ = An Oil Film Condition Constant
G = Non-Dimensional Duty Parameter ($=\mu \cdot u \cdot b/P_r$)

(P_r = Radial Lip Load on Shaft (N{kgf})
μ = Oil Viscosity (N·s/cm^2 {kgf·s/cm^2})
u = Linear Shaft Velocity (cm/s)
b = Lip-to-Shaft Constant Band Width (cm))

In Fig. 2-2, the positive slope area of the frictional properties has been explained by the lubrication theory. Under such lubrication conditions, the frictional property of seals is governed by the viscosity of the fluid and the shaft's linear velocity (and is also identical to the frictional property of the bearing), and the resultant oil film present underneath the lip edge. In other words, the oil seal's lip and the shaft slide against each other with an intervening film of oil, thus reducing wear.

(2) The Sealing Mechanism

NOK was the first to actually view the sealing mechanism of an oil seal using state-of-the-art image processing technology. Underneath the very narrow lip edge, oil is continually circulated from the air side to the oil side, and then from the oil side to the air side, thus lubricating the sliding surfaces and limiting wear. Theoretical studies have revealed that the sealing mechanism is determined by minor “irregularities” in the sliding surface, and by how th e pressure is distributed at the contact area. Here, the sealing mechanism of oil seal is briefly described through macroscopic phenomena.
Lip materials are an important factor in the formation of these special irregularities on the sliding surface of oil seals. Fig. 2-3 shows the textures of the lip surface of two different materials. Lip material A produces a more significant texture on the sliding surface than lip material B.

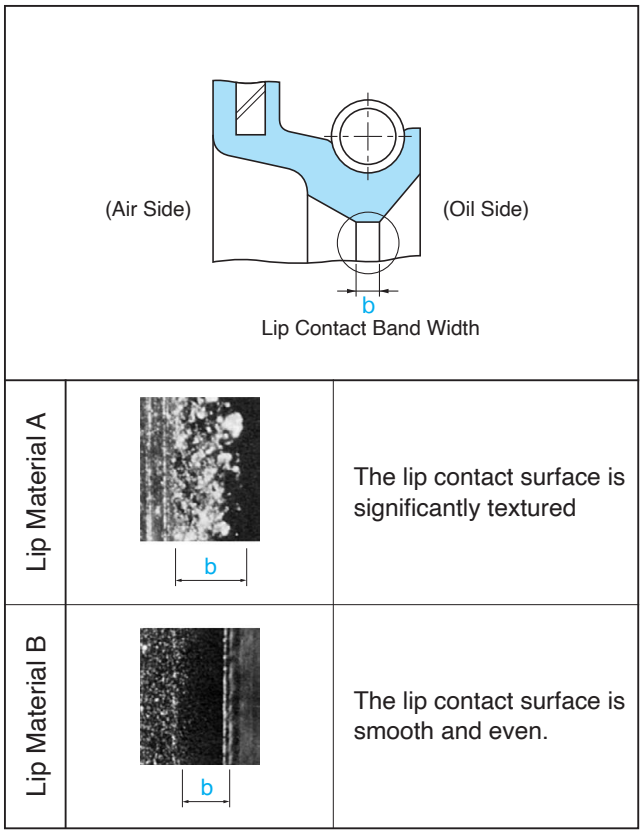

Fig. 2-3 Lip Surface Textures of Two Materials

Two oil seals having identical contact pressure distributions were produced using these two lip materials. Since it is generally difficult to measure an air intake rate on an oil seal, the fluid transfer rate is measured using a reversed seal orientation. Thus, oil is now on the “air-side” of the seal, and is transferred under the seal lip via the seal’s pumping action.

Scenario (a) in Fig. 2-4 shows a normal seal installation, i.e., when air is forced toward the oil side. Scenario (b) shows that oil is transferred toward the air side because the oil seal is installed in, the reverse direction.

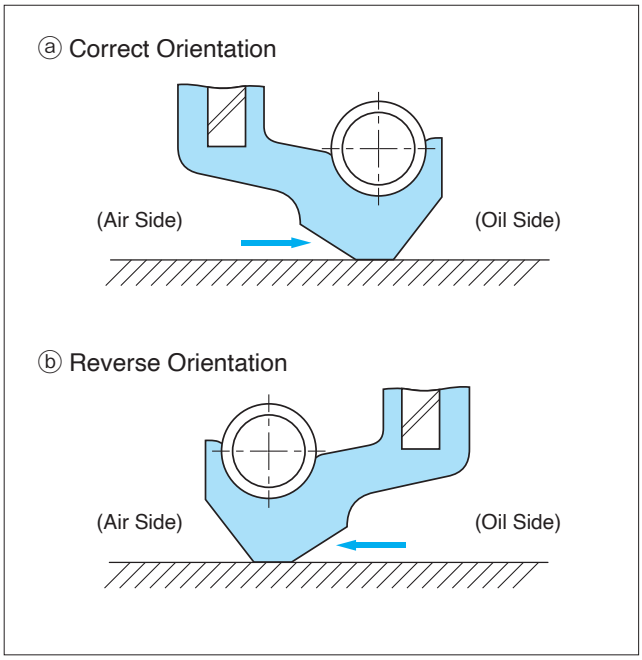

Fig. 2-4 Normal and Reversed Oil Seal Orientation

Through the reverse installation (b), the seal’s ability to pump oil was quantified by running the shaft and measuring the resultant oil flow rate. As a result, lip material A was easily identified as more effective in pumping fluid from the air side toward the oil side than lip material B. This was true only when the shape of the lip is not considered (or the same). Even when the lip materials were identical, the pumping ability changes according to the profile of contact pressure distribution; for instance, by changing the shape of the lip.

The two critical elements described above that exert control over the seal’s performance, the lubrication characteristics and sealing mechanism, are in a delicately controlled balance through two design factors: the material and shape of the lip. Therefore, in view of these material science considerations, it is necessary to keep in mind that the circulating oil flow must be restricted to within the lip contact area, and that the average film thickness under the seal lip must be controlled. NOK has put considerable effort into developing lip materials specifically based on the above concepts, and has developed oil seals that can respond to various demanding conditions. NOK will continue to concentrate on providing products of unsurpassed performance and quality through our ongoing development activities.

3. OIL SEAL TYPES

At NOK, we classify oil seals as "standard" oil seals and "general" oil seals.

(1) Standard/General Oil Seals

a. Standard Oil Seals

The Standard Oil Seal is selected based on NOK's global market track record and understanding of customer needs, and has the following characteristics:

❶Versatility

These oil seals can be used under normal defined operating conditions. (Standard models and standard materials).
See pages 10 and 11 for normal operating conditions.

❷Availability

These are easily obtained in Japan and throughout the world.

❸Conforms to International and Domestic Codes and Standards

NOK oil seals comply with ISO, JIS, and JASO standards. (Standard types and standard dimensions, shaft outer diameter of 300 mm or less)

- For details on general standards related to "Types, Features, Allowable Operating Conditions of Standard Oil Seals," please refer to pages 9 through 11.

b. General Oil Seals

NOK's general oil seals are designed for specific machines or special conditions and requirements.

- See "Table 3-3, 3-4 Types and features of general oil seals and guidelines for acceptable use" on page 12 ~ 15 for a list of general oil seals that are relatively versatile or have a wide range of dimensions.

  Other oil seals are partially described in "Table 3-5, 3-6 Introducing Other Oil Seals" on pages 16 and 17.

  Please contact us regarding oil seals not listed in this book (i.e., oil seals of standard designs or dimensions but of non-standard materials, or oil seals of standard designs or materials but of non-standard dimensions).

Please consult separately if you plan to use the product in food appliances.
Please do not use catalogue items for aircraft/nuclear related equipment/railways and consult individually.
The oil seals described in this catalog are not designed or manufactured to be suitable for medical devices and should not be used for medical device applications where they are implanted into human bodies or come into contact with body fluids or biological tissues.

(2) A Comparison of NOK Type and ISO, JIS, and JASO Type Oil Seals

Standard / Profile/shape	NOK	ISO	JIS	JASO
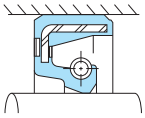	**SC**	Type4	TYPE 1	S
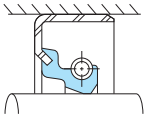	**SB**	Type1	TYPE 2	SM
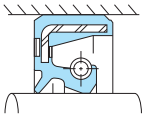	**TC**	Type4 With Lip	TYPE 4	D
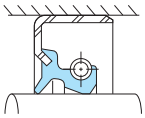	**TB**	Type1 With Lip	TYPE 5	DM
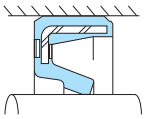	**VC**	—	—	G
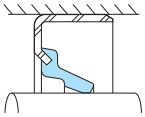	**VB**	—	—	GM
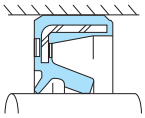	**KC**	—	—	P
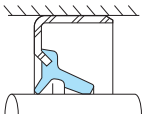	**KB**	—	—	PM

(3) Corresponding list of NOK Part number (initial 2 figures) and NOK Type

Part number: A B 1 2 3 4 E 0

- B — Small classification
- A — Large classification

Large classification	Small classification	NOK typ
A or B	A	SA type or TA type or VA type or KA type
	B	SB type
	C	SC type
	D	TB type
	E	TC type
	F	VB type or KB type
	G	VC type or KC type
	H	Helical Seal
	J	PTFE Seal
	M	M type
	N	MO type (Morgoil Seal)
	O	OC type (Outer lip Seal)
	P	Pressure Resistant Seal
	Q	Unitized Seal and Shaft Assembly
	R	Reciprocating Seal
	S	Stuntube Seal
	U	Universal Joint Seal
	V	Valve Stem Seal
	W	D type
	Z	Others

(4)-1. Types, Features, Allowable Operating Conditions of Standard Oil Seals

Table 3-1 Types and Features of Standard Oil Seals

NOK Type Designation and Cross-Section	Shaft Motion	Primary Uses	Features	Page Numbers Showing Dimension Listings
S type 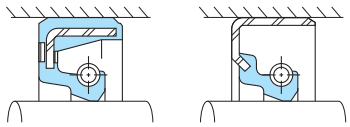 **SC type** **SB type**	Rotating	Oil seal for dust-free applications (Maximum pressure: 0.03MPa {0.3kgf/cm²})	Oil seal for dust-free use with fluid sealed on one side	90
T type 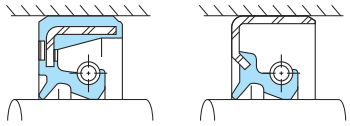 **TC type** **TB type**	Rotating	Oil seal for dusty environments (Maximum pressure: 0.03MPa {0.3kgf/cm²})	Oil seal for very fine dust duty on one side, and fluid sealed on the other side	108
New Fabric Seal 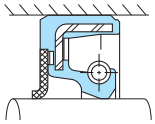 **TCK type**	Rotating	Oil seal for coarse dirt/sand environments (Maximum pressure: 0.03MPa {0.3kgf/cm²})	The TCK type can be used for the same purposes as the TC and TB types, but it features better dust resistance and air permeability. It produces less friction because the dust lip is made of a NOK-developed special fabric.	122
V type 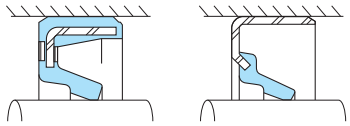 **VC type** **VB type**	Rotating	Grease or dust seal (Cannot be used for pressure applications)	Used to seal in grease or seal out dust. Can be used in combination with the S-type oil seal.	123
K type 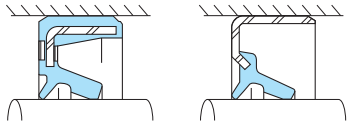 **KC type** **KB type**	Rotating	Grease seal for dusty envionment duty (Cannot be used for pressure applications)	Used to seal in grease when there is a small amount of dust on the other side. Two V-type oil seals can also be used.	128
TCV type 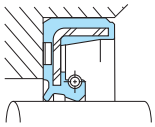	Rotating	Oil seal for pressurized duty (For allowable pressures, see pages 26 and 27.)	Pressure-resistant oil seal with increased lip rigidity. Used for relatively small-diameter and medium-pressure rotating shafts.	130
TC type 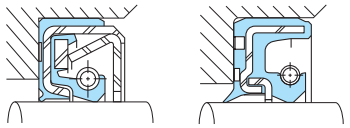 **TCN type** **TCZ type**	Rotating		Pressure-resistant oil seal with an auxiliary cage to minimize lip deformation under pressure. Used for high-pressure rotating shafts.	129, 131
T4 type 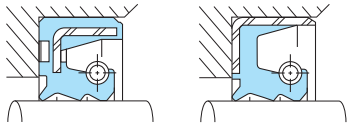 **TC4 type** **TB4 type**	Reciprocating	Oil seal for reciprocating-shaft applications (For allowable pressures, see page 11.)	Oil seal designed to minimize lip deformation under reciprocating motion and pressure.	132

(4)-2. Types, Features, Allowable Operating Conditions of Standard Oil Seals

Table 3-2 General Standards Related to Allowable Operating Conditions for Standard Oil Seals

Item / NOK Seal Type	General Standards Related to Allowable Operating Conditions Linear Shaft Velocity (m/s)
S series 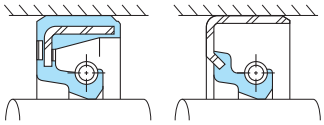 SC type SB type T series 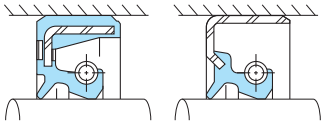 TC type TB type New fabric seal 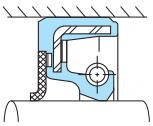 TCK type	Use a linear shaft velocity within the permissible range plotted in Graph (1). Graph (1): Shaft Diameter vs. Maximum Allowable Linear Shaft Velocity 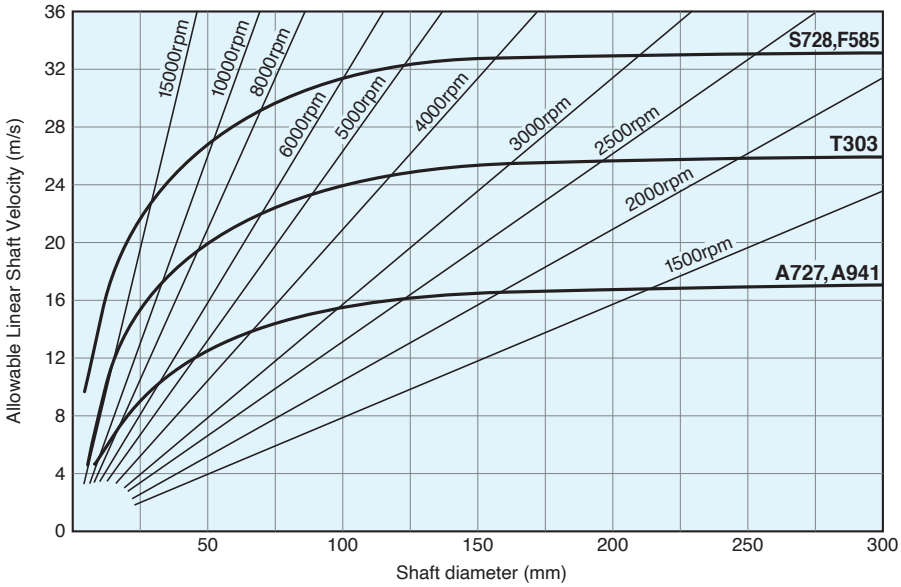
V series 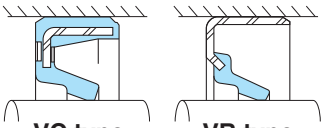 VC type VB type K series 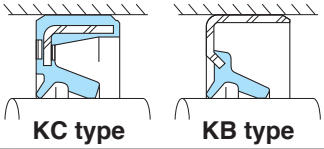 KC type KB type	Use a linear shaft velocity within the permissible range plotted in Graph (2). Graph (2): Shaft Diameter vs. Maximum Allowable linear Shaft Velocity. 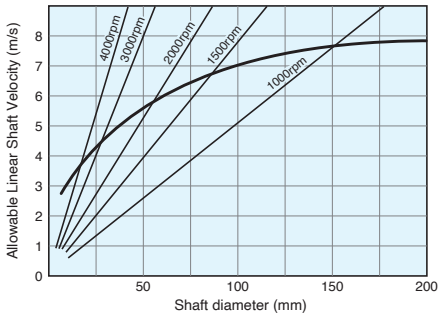
TCV type TCN type 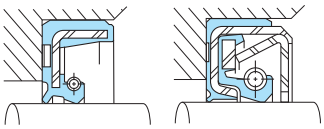 TCZ type 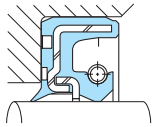	Use the average normal pressure and average linear shaft velocity within the range plotted in Graph (3). For momentary peak pressure (surge pressure) limits, use the following as a guide. TCV type: 0.3MPa {3kgf/cm^2} TCN type: 0.98MPa {10kgf/cm^2} TCZ type: 2.0MPa {20kgf/cm^2} Graph (3): Surge pressure limits of TCV, TCN and TCZ type oil seals 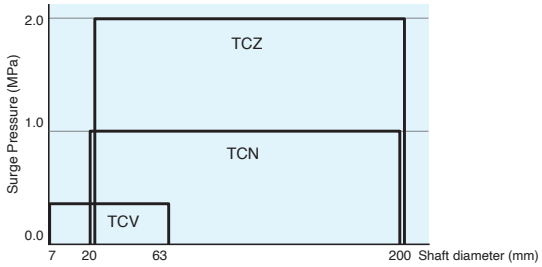
T4 type 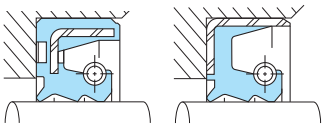 TC4 type TB4 type	Linear shaft velocity must be 1.5 m/s or less.

*Note: Please refer to page 17 for precautions related to "Environment temperature (°C)" and "Total Run-out."

General Standards Related to Allowable Operating Conditions

Pressure (MPa)

(1) The maximum pressure limit is 0.03 MPa {0.3 kgf/cm^2}.
(2) When the lip material is nitrile rubber or fluorocarbon rubber and the shaft diameter is less than 30 mm, a pressure 0.03 MPa {kgf/cm^2} or more is allowed.

Environment Temperature (°C)*

Lip Material	Maximum Normal Temperature	Normal Temperrature	Minimum Temperrature
A727	100	80	–30
A941	80	70	–25
T303	130	110	–15
T945	140	120	–37 *
S728	150	130	–45
F585	170	150	–15

* These are materials that differ from those listed in the catalog. They exhibit superior heat and cold resistance. Please inquire further if you are considering to select these products.

Maximum Allowable Total Shaft Run-out*

Total Run-out is expressed as the sum of the shaft-to-bore misalignment and shaft dynamic run-out. The permissible total shaft run-out vs. shaft diameters is plotted in Graph (6). Make sure that the sum of these off-centers (i.e., the total run-out) does not exceed the permissible range in Graph (6).

Total Shaft Run-out
= dynamic shaft run-out (mm TIR) + [shaft-to-bore misalignment (mm) × 2]

Note(1): "TIR" means total indicator reading.
Note(2): Since only the center-to-center offset is measured, the total shaft-to-bore run-out is twice as much as the center-to-center measurement.
(Example) Since the permissible total run-out is 0.35mm TIR for a shaft diameter of 50mm running at 2000 rpm, insure that the shaft-to-bore misalignment is 0.25mm TIR or less if the shaft dynamic run-out is a maximum of 0.1 mm TIR.

Graph (6): Maximum Allowable Total Shaft Run-out vs. Shaft Diameter (at R.T.)

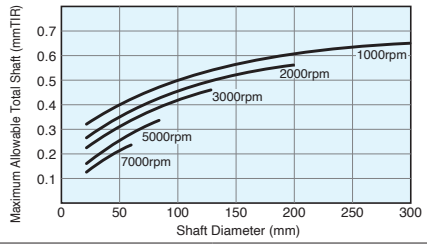

V and K type oil seals cannot be used where pressure is applied.

Lip Material	Maximum Normal Temperature	Normal Temperrature	Minimum Temperrature
A727	100	80	–30
A941	80	70	–25

Ensure that the total shaft run-out is within the permissible range plotted in Graph (7).

Graph (7): Maximum Allowable Total Shaft Run-out vs. Shaft Diameter (at R.T.)

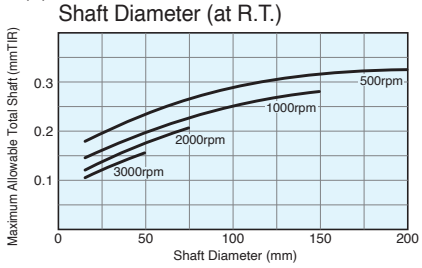

Use the average normal pressure and average linear shaft velocity within the range plotted in Graph (4).

Graph (4): Allowable Operating range of TCV, TCN

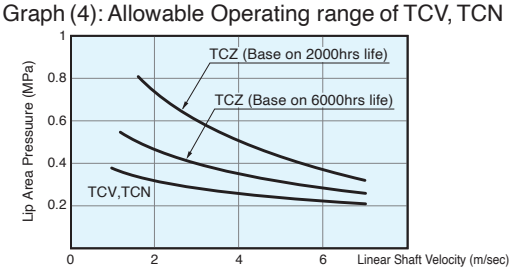

Lip Material	Maximum Normal Temperature	Normal Temperrature	Minimum Temperrature
A795	70	60	–11
F548	150	120	–16

0.1mm TIR or less

0.05mm TIR or less

Use a pressure within the permissible range plotted in Graph (5).

Graph (5): Maximum Allowable Pressure vs. Shaft Diameter

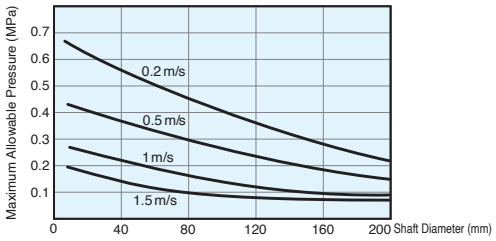

Lip Material	Maximum Normal Temperature	Normal Temperrature	Minimum Temperrature
A795	80	70	–11

0.2mm TIR or less

(5)-1. Types, Features, Allowable Operating Conditions of General Oil Seals

Table 3-3 General Standards Related to Types, Features, Allowable Operating Conditions of General Oil Seals-1

Item / NOK Seal Type	Shaft Motion	Primary Uses	Features	Lip Material		
				Material Family Type	NOK Material Code	Hardness (DurometerA)
OC type 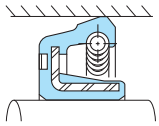	Rotating (Housing)	Oil or grease seal with a rotating housing structure	This is an oil seal with a seal lip on the outer periphery, and applied for rotating housing structure.	Nitrile Rubber (NBR)	A727	70
QLFY type (Unitized Seal) 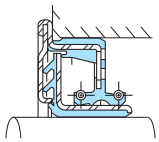	Rotating	Seal for an axle or claw axle of a tractor or power tiller	Oil seals intended for use in muddy water; The product consisting of an oil seal and an L-shaped sleeve and integrated for sealing performance and easy handling.	Nitrile Rubber (NBR)	A571	75
VR type (V-shaped End Face Seal) 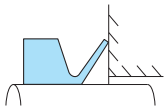	Rotating	Grease or dust seal for various machines (Use W type seals to seal water or scale at the roll neck of rolling mills)	Unitized rubber seal: used by press-fitting the inner surface and sliding seal axially to contact the end face of the housing.	Nitrile Rubber (NBR)	A134	60
				Fluoro-carbon Rubber (FKM)	F129	70
Z type*1 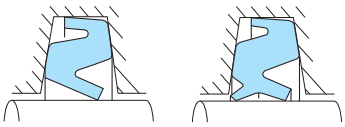 **ZF type** **ZT type**	Rotating	Grease seal tor the plummer block of an anti-friction bearing	Used by mounting the oil seal into the trapezoidal groove of the plummer block of an anti-friction bearing. Use ZT type for higher dust environment.	Nitrile Rubber (NBR)	A103	70
MG type*2 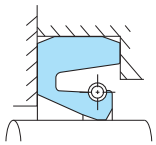	Rotating	Oil or water seal. Used for areas where seal cannot be inserted from the shaft end	Used when a machine cannot be assembled without cutting the oil seal. A hook joint spring is used to mount the sealing lip, and the outer surface is sealed by pressing down against the contact surface of the shaft. Since one part of the seal is cut, the sealing performance is inferior to that of S-type seals.	Nitrile Rubber (NBR)	Lip: A103 (Exterior Surface: A992)	70 (90)
					A104	80

*1 Catalogues of models **ZF** and **ZT** type were discontinued at the end of September 2024.
Details of product specifications and handling are provided in the same manner as for other general oil seal catalogs.
*2 Small amount of leakage may occur from the matching surface area with MG type seal which has one cuting portion.

*Note: Please refer to page 17 for precautions related to "Environment temperature (°C)" and "Total Run-out."

General Standards Related to Allowable Operating Conditions				Page Numbers Showing Dimension Listings
Linear Shaft Velocity (m/s)	Pressure (MPa)	Environment Temperature (°C)*	Total Run-out (mm TIR)*	
10 or less	max 0.03 {max 0.3kgf/cm²}	Lip Material / Maximum Normal Temperature / Normal Temperrature / Minimum Temperrature **A727** / 100 / 80 / –30	Shaft diameter (d) / Total run-out ＜d ≦ 40 / 0.25 40 ＜d ≦ 80 / 0.3 80 ＜d ≦ 120 / 0.4 120 ＜d ≦ 200 / 0.5	134
2 or less	max 0.03 {max 0.3kgf/cm²}	Lip Material / Maximum Normal Temperature / Normal Temperrature / Minimum Temperrature **A571** / 80 / 70 / –25	0.35 or less	135
10 or less	Cannot be used where pressure is applied.	Lip Material / Maximum Normal Temperature / Normal Temperrature / Minimum Temperrature **A134** / 80 / 70 / –20 **F129** / 150 / 120 / –15	—	136
3 or less	Cannot be used where pressure is applied.	Lip Material / Maximum Normal Temperature / Normal Temperrature / Minimum Temperrature **A103** / 80 / 70 / –22	0.3 or less	—
5 or less	Cannot be used where pressure is applied.	Lip Material / Maximum Normal Temperature / Normal Temperrature / Minimum Temperrature **A103** / 80 / 70 / –22 **A104** / 80 / 70 / –21	0.2 or less	144

(5)-2. Types, Features, Allowable Operating Conditions of General Oil Seals

Table 3-4 General Standards Related to Types, Features, Allowable Operating Conditions of General Oil Seals-2

Item / NOK Seal Type	Shaft Motion	Primary Uses	Features	Lip Material		
				Material Family Type	NOK Material Code	Hardness (Durometer A)
SBB type 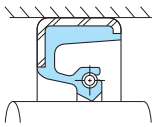	Rotating	Oil or water seal for dust-free and large-diameter shaft use (Shaft diameter: >300mm)	Oil seal for dust-free use with fluid sealed on one side. Better under high-speed rotation than the large-diameter SB type. A spacer-attached model is also available.	Nitrile Rubber (NBR)	A941	80
Large-Diameter SB type 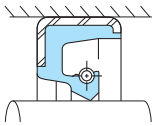	Rotating	Oil or water seal for dust-free and large-diameter shaft use (Shaft diameter: >300mm)	Oil seal for dust-free use with fluid sealed on one side. A spacer-attached model is also available.			
Large-Diameter TB type 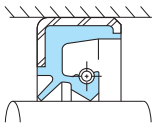	Rotating	Oil or water seal for dusty-area and large-diameter shaft use (Shaft diameter: >300mm)	Oil seal for light duty dust (dirt or sand) on one side and fluid sealed on the other side.			
J type (Rareflon Seal) 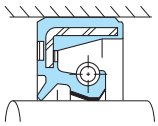 **TCJ type**	Rotating	Seal for two-cycle engines, torque converters, or washers	Oil seal with a sealing edge of NOK's unique PTFE (ethylene tetrafluoride resin) featuring excellent self-lubricity. Best for use in poor—lubrication areas or low-friction torque use.	Nitrile Rubber (NBR)	A103+ 31BF	70
				Acrylic Rubber (ACM)	T303+ 31BF	80
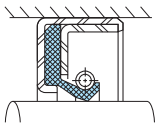 **SA1J type**	Rotating	Chemical-resistant seal for high-pressure duty	Oil seal with a sealing edge of NOK's unique PTFE (ethylene tetrafluoride resin) for excellent chemical resistances. SA1J type: Garter spring and case are made from SUS (stainless steel) material. Good for sealing chemicals. VAJ type, KA3J type: Case is made from SUS (stainless steel) material. Good for sealing fine particulates or highly viscous fluids.	Tetrafluo-roethylene resin (PTFE)	31BF	65 (Durometer D)
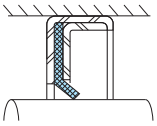 **VAJ type** 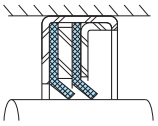 **KA3J type**	Rotating	Seal for agitator, blower, or food processing applications				

*Note: Please refer to page 17 for precautions related to "Environment temperature (°C)" and "Total Run-out."

<table>
<tr><th colspan="4">General Standards Related to Allowable Operating Conditions</th><th rowspan="2">Page Numbers Showing Dimension Listings</th></tr>
<tr><th>Linear Shaft Velocity (m/s)</th><th>Pressure (MPa)</th><th>Environment Temperature (°C)*</th><th>Total Run-out (mm TIR)*</th></tr>
<tr><td>10 or less</td><td rowspan="3">max 0.03
{max 0.3kgf/cm²}</td><td rowspan="3"><table><tr><th>Lip Material</th><th>Maximum Normal Temperature</th><th>Normal Temperrature</th><th>Minimum Temperrature</th></tr><tr><td>A941</td><td>80</td><td>70</td><td>–25</td></tr></table></td><td><table><tr><th>Shaft diameter (d)</th><th>Total run-out</th></tr><tr><td>300 < d ≦ 500</td><td>0.4</td></tr><tr><td>500 < d ≦ 700</td><td>0.6</td></tr><tr><td>700 < d ≦ 1200</td><td>0.8</td></tr><tr><td>1200 < d ≦ 2000</td><td>1.0</td></tr></table></td><td>138</td></tr>
<tr><td rowspan="2">10 or less</td><td rowspan="2"><table><tr><th>Shaft diameter (d)</th><th>Total run-out</th></tr><tr><td>300 < d ≦ 500</td><td>0.6</td></tr><tr><td>500 < d ≦ 630</td><td>1.0</td></tr><tr><td>630 < d ≦ 1000</td><td>1.6</td></tr><tr><td>1000 < d ≦ 2000</td><td>2.2</td></tr></table></td><td>138</td></tr>
<tr><td>143</td></tr>
<tr><td rowspan="2"></td><td>Graph (8): Maximum Allowable Pressure vs. Linear Shaft Velocity
 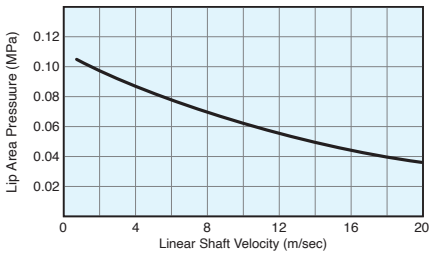
</td><td>max 0.3
{max 3kgf/cm²}</td><td rowspan="2"><table><tr><th>Lip Material</th><th>Maximum Normal Temperature</th><th>Normal Temperrature</th><th>Minimum Temperrature</th></tr><tr><td>A103</td><td>80</td><td>70</td><td>–22</td></tr><tr><td>T303</td><td>130</td><td>110</td><td>–15</td></tr></table></td><td><table><tr><th>Shaft diameter (d)</th><th>Total run-out</th></tr><tr><td>< d ≦ 40</td><td>0.2</td></tr><tr><td>40 < d ≦ 80</td><td>0.3</td></tr><tr><td>80 < d ≦ 120</td><td>0.4</td></tr></table></td><td>146</td></tr>
<tr><td>15 or less</td><td>max 0.3
{max 3kgf/cm²}</td><td><table><tr><th>Shaft diameter (d)</th><th>Total run-out</th></tr><tr><td>< d ≦ 40</td><td>0.15</td></tr><tr><td>40 < d ≦ 80</td><td>0.2</td></tr><tr><td>80 < d ≦ 120</td><td>0.25</td></tr><tr><td>120 < d ≦ 200</td><td>0.3</td></tr><tr><td>200 < d ≦ 300</td><td>0.35</td></tr></table></td><td>147</td></tr>
<tr><td>5 or less</td><td>max 0.1
{max 1kgf/cm²}</td><td><table><tr><th>Lip Material</th><th>Maximum Normal Temperature</th><th>Normal Temperrature</th><th>Minimum Temperrature</th></tr><tr><td>31BF</td><td>200</td><td>180</td><td>–50</td></tr></table></td><td>147</td></tr>
</table>

(6) An Introduction to Other Oil Seals

Table 3-5 An Introduction to Other Oil Seals

NOK Type Designation and Cross-Section	Shaft Motion	Primary Uses	Features
W type 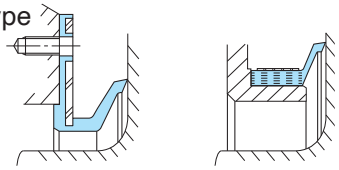 **WT type** **WTT type**	Rotating	Water or scale seal for the roll neck of rolling mills	An oil seal to prevent the entry of water or scale by sliding the sealing lip against the shaft (flange) end face. The WT type is mounted by bolting, and the WTT type is mounted by tightening the collar band.
OKC3 type 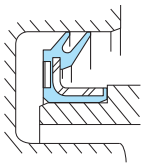	Rotating	Water or scale seal for the roll neck of rolling mills	Water or scale seal. Used by pressing the inner diameter surface of the seal onto the housing and sliding the outer sealing lip against the inner surface of the shaft (flange).
MO type (Morgoil seal) 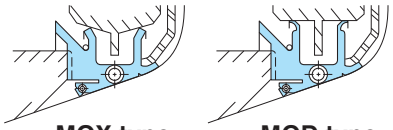 **MOX type** **MOD type**	Rotating	Two-liquid oil and water seal for the roll neck of rolling mills	Roll neck seal for film bearing (Morgoil). Seals oil inside and water outside by fixing the inner surface to the shaft (roll) and sliding two sealing lips on the housing side against the housing.
MOY type (Meseta seal) 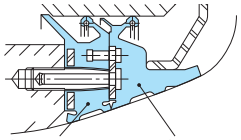 **MOY1 type** **MOY2 type**	Rotating		Roll neck seal for film bearing (Mitsubishi Bearing). The inner surface of the seal is fixed to the shaft (roll) and outside lip on the housing side slides. Use MOY1 type (oil side) and MOY2 (water side) as a set. Can be changed individually.
Helical Seal 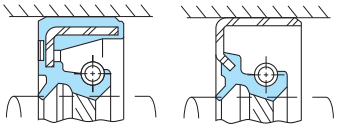 **HTC type** **HTB type**	Rotating	Oil seal fore ngines or	Oil seal where the entire sealing lip edge has a molded-in helical feature on the air side. This "screw thread" acts to return the fluid trying to escape outside through the sealing lip back inside using a screw-pump action.
Super Package Seal 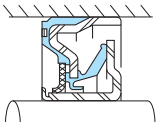 **CSK type**	Rotating	Seals splashing oil in engines	Oil seal where the end face seal and the slinger are molded, thereby improving installation reliability. Best under high-speed rotation.
Severe-Dust Seal 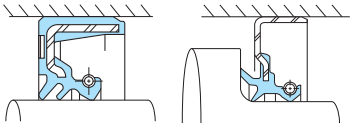 **TCY type** **TB9 type**	Rotating	Seals areas where muddy water splashes on tractor or power tiller	Oil seal where the two dust-side lips or side lip of a T-type oil seal are used to improve dust and muddy water resistance.
Washer Seal 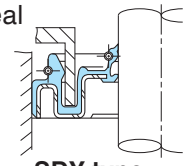 **SDY type**	Rotating	Seal for dewatering shaft of a washer	Oil seal designed specifically for washers. Seals water in two places (dewatering shfta and inside the washing tub) of fully-automatic washers.
Speed Reducer Seal 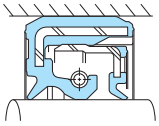 **RE type**	Rotating	Seals areas where need to consider a lot of oil contamination such as Speed Reducer.	Oil seal which is placed an additional lip for protecting the oil contamination invasion to the main lip. It helps the reduction of the main lip wear.

Table 3-6 An Introduction to Other Oil Seals

NOK Type Designation and Cross-Section	Shaft Motion	Primary Uses	Features
Valve Stem Seal 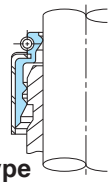 **VSB type**	Reciprocating	Seal for engine intake and exhaust valve stems	Oil seal to maintain a proper film of oil between the valve stem and valve guide of an engine.
High Pressure Seal 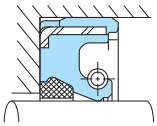 **SCJY type**	Reciprocating	Seal for reciprocaitng rods with relatively large dynamic shaft misalignment	Oil seal for reciprocating motion Pressure resistance is improved by an assembling nylon backup ring. Compared to U-type packing, this model is more suitable when a rod's dynamic misalignment is relaitvely large.
Gas Spring Seal 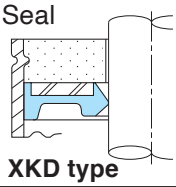 **XKD type**	Reciprocating	Seal for gas-spring rods of business machines, furniture, or medical equipment	Oil seal for reciprocaitng rods of high-pressure gas cylinders, with good sealing performance and low friction.
Control Valve Seal 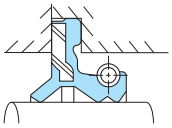 **SVY type**	Reciprocating	Oil seal for hydraiulc control valves of construction machinery	Sealing performance is better and friction is lower than a rubber-only seal. The seal is fixed by clamping the outer flange.
Dust Seal 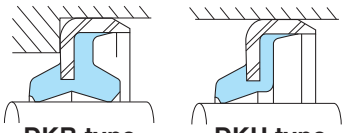 **DKB type** **DKH type**	Reciprocating	Dust seal for hydraulic cylinders	Seal to prevent the entry of dust. The DKB seals oil better than the DKH type.

Precautions Related to Environment Temperature (°C) and Total Run-Out

(Table 3-2, Table 3-3, and Table 3-4 on pages 10 through 15)

Note(1): The working ranges listed are a general guide based on the general seal shape and material, and may vary with actual working environments or seal designs. For use at higher linear shaft velocities, higher pressures, or higher/lower temperature regions than shown here, please consult us.

Note(2): The environmental temperature limtis will vary depending on the type of rubber, oil, or linear shaft velocities. Generally, the limiting environmental temperature is as specified in the colum "Environmental Temperature (°C)" in the table below. For details of the allowable operaitng temperature of various lip materials, see the section beginning on page 18.

Note(3): Total Run-out is expressed as the sum of the shaft-to-bore misalignment and shaft dynamic run-out. Make sure that the sum of these off-centers (i.e., the total run-out) does not exceed the permissible range.

Total Shaft Run-out
=dynamic shaft run-out+[shaft-to-bore misalignment×2]
(mm TIR) (mm)

- "TIR" means total indicator reading.
- Since only the center-to-center offset is measured, the total shaft-to-bore run-out is twice as much as the center-to-center measurement.

(Example) Since the permissible total run-out is 0.35mm TIR for a shaft diameter of 50mm running at 2000 rpm, insure that the shaft-to-bore misalignment is 0.25mm TIR or less if the shaft dynamic run-out is a maximum of 0.1 mm TIR.

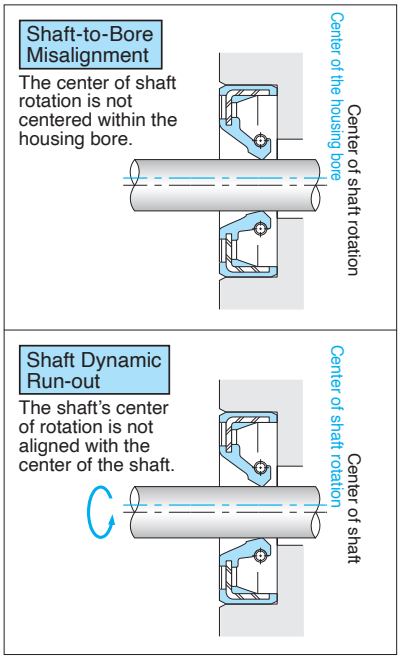

Fig. 3-1 Shaft-to-Bore Misalignment and Shaft Dynamic Run-out

Explanation of terms under the column "Environmental Temperature"

Maximum Temperature:
The temporary peak maximum temperature.

Maximum Normal Temperature:
The maximum temperature within the normal service temperature range, except for momentary peak temperatures.

Normal Temperature:
The atemperature at which the oil seal is most frequently used.

Minimum Temperature:
The lowest temporary temperature.

(7) Allowable Temperature Range

Pages 10 through 15 describe the allowable temperature ranges for various lip materials. Note that the actual temperature limitations may vary in accordance with such factors as the type of fluid sealed or usage time. Therefore, it is necessary to consider these factors when selecting a lip material.

Here are some examples of the typical S-type oil seals for your reference.
Please note that the lip rise temperature of the T-type is twice that of the S-type, and the V-type and K-type are about the same as the S-type.

To select the proper lip material for an oil seal, it is necessary to estimate the approximate temperature at the seal lip edge oft he oil seal (T_0). This temperature can be estimated by determining the maximum normal temperature of the fluid near the oil seal (T_1), and the increased underlip temperature generated by the friction between the shaft and lip (T_2). (Refer to Fig. 3-2)
The temperature at the sealing edge (T_0) can be given by the expression (1) below.

$$T_0 = T_1 + T_2 \quad \cdots\cdots(1)$$

T_0: Temperature at the seal lip edge
T_1: Temperature of sealed fluid nearest to the oil seal (maximum normal temperature)
T_2: Friction-generated heat

A suitable lip material needs to be selected based on the temperature of the seal lip edge and the type of sealed fluid, and it is necessary to select a material within the upper limit of the maximum allowable temperature (T) for the lip materials shown in Table 3-7 on page 19.

The permissible temperature of a lip material varies with the operating conditions of the actual equipment used.

Table 3-7 shows an example in which the usage time at the maximum normal temperature is within 30% of the total operating time. Thus, if the working time at the maximum normal temperature exceeds 30% of the total operating time, reduce the permissible temperature (T) by 20°C.

For gear oil or high-viscosity silicone oil, the friction-generated heat at the lip (T_2) is 1.5 times the value shown in Fig. 3-2. For grease, the friction-generated heat at the lip is 3 times that shown in Fig. 3-2.

Regarding lip material selection, please refer to Example ❶ on page 28 and Example ❷ on page 29.

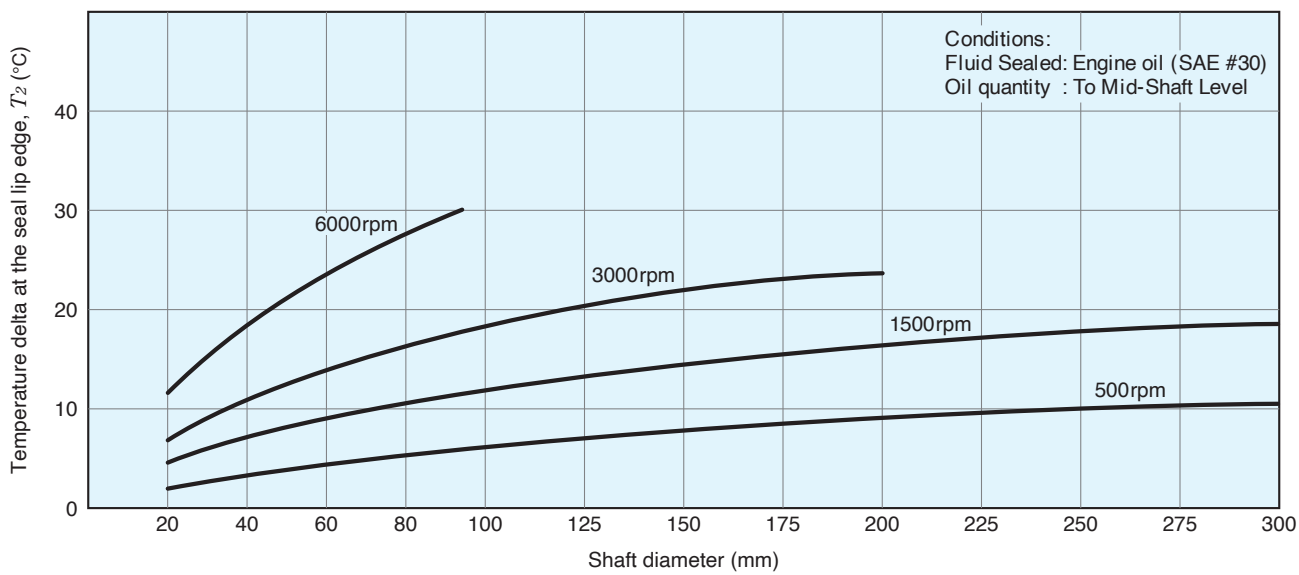

Please note that the temperature at the lip of the T type seal rises twice as much as the S type, and that the temperature rise of the V and K types is the same as that of the S type.

For gear oil or high-viscosity silicone oil, the friction-generated heat at the lip (T_2) is 1.5 times the value. For grease, the friction-generated heat at the lip is 3 times the value.

Fig. 3-2 A Guide to the Friction-Generated Heat at the Seal Lip (S type)

Table 3-7 Allowable Operating Temperature Ranges of Various Lip Materials in S-Type Oil Seals

Types of Fluid to be Sealed		Allowable operating temperature of the lip material (maximum temperature) T (°C)																
		40	50	60	70	80	90	100	110	120	130	140	150	160	170	180	190	200
Engine oil	SAE #30				A727									S728				
					A941													
	SAE10W-#30				A727													
					A941													
Gear oil	Vehicles				A727						T303			F585				
					A941													
	Hypoid gears				A727													
					A941													
Torque converter Oil Automatic Transmission Fluid					A727													
					A941													
Brake fluid	DOT3 (glycol base)	(R188) Styrene-butadiene rubber					(E747) Ethylene-propylene rubber											
	DOT5 (glycol base)																	
	DOT5 (silicone base)				A727													
Turbine oil	Class 2				A727													
					A941													
Machine oil (No.2 spindle oil)					A727													
					A941													
Hydraulic fluid (mineral oil base)					A727										F585			
					A941													
Grease	Mineral oil based				A727						T303							
					A941													
	Silicone based				A727													
					A941						F585							
	Fluorine based				A727													
					A941													
Gasoline																		
Light oil, kerosene		A795		F585														
Heavy oil		A795																
		A941																

Note(1): Only the maximum value of the allowable temperature is used.
Note(2): The heat resistance of the fluid sealed must be greater than the lip material's resistance.
Note(3): A727 (for a shaft diameter of 150 mm or less) and A941 (for a shaft diameter of over 150 mm) are standard materials.
Note(4): The lip materials shown in parentheses are NOK's non-standard materials.
Note(5): For sealing solutions not shown in the table, see pages 62 through 79.
Note(6): The cost guide for each material is shown on the right.
Note(7): For water-based hydraulic fluid (water + emulsion base or water + glycol base), synthetic fluid based grease, and other oils (ester oil, glycol oil), please consult us. It is necessary to confirm that these oils are suitable for use.

Lip Material Type	Cost
Nitrile rubber	Less expensive
Acrylic rubber	↑
Silicone rubber	
Fluorocarbon rubber	
Tetrafluoroethylene resin (PTFE)	More expensive

If the usage time at the maximum normal temperature exceeds 30% of the total working time, reduce the allowable temperature by 20°C (T-20°C)

4. OIL SEAL MATERIALS

An oil seal is constructed of rubber (seal lips and outer surfaces), a garter spring and an internal case. The following materials are used for each part.

4

(1) Rubber

a. Types and Major Uses of Rubber Materials Used for Oil Seals

In order to enable oil seals to function properly, it is absolutely necessary to select a lip material that is appropriate for the applicable operating conditions. When selecting lip materials, refer to Table 4-1 for some general standards and select them based on their operating temperatures and their resistance to the substance being sealed.

Table 4-1 Selecting Rubber Materials for NOK Oil Seals

NOK Lip Material								
Rubber Type	Features	Material Symbol (Color)	Hardness (Durometer A)	Temperature Range (°C)	Primary Uses	Fluid to be Sealed Note(2) Mineral Oil	Muddy Water, Water	Grease
Nitrile Rubber (NBR)	This material is most often used in oil seals due to its excellent resistance to mineral oil and abrasion; however, oil seals made of this rubber cannot be used for polar solvents, such as ketone or ester.	A727(Black)	70	−30 to +120	Standard material (for rotaitngs hafts)	○		○
		A941(Black)	80	−25 to +100	Standard material for medium-to-large diameter (over 150 mm) shafts (for rotating shafts)	○		○
		A795(Black)	80	−11 to +100	Standard material (for reciprocating shafts and high pressure), fuel oil resistance	○		○
		A275(Black)	70	−40 to +100	Cold and weather resistance (for rotating shafts)	○		○
		A437(Black)	80	−40 to +100	Cold resistance (for reciprocating shafts)	○	○	○
		A571(Black)	75	−25 to +100	Abrasion resistance from muddy water (for rotating shafts)		○	○
		A368(Black)	75	−20 to +100	Compliance with the Food Sanitation Law (for rotaitng shafts)			○
		A989(Black)	70	−20 to +100	Special material (MO type)	○	○	○
		A103(Black)	70	−22 to +100	Water resistance (for rotating shafts)		○	
					Special material (TCJ type)	○		○
		A104(Black)	80	−21 to +100	Special material (MG type)	○	○	○
		A134(Black)	60	−20 to +100	Special material (VR type)		○	○
Hydrogenated Nitrilel Rubber (HNBR)	This rubber has similar characteristics to nitrile rubber for oil seal use, but has beter resistance to heat, oils, and weather than standard nitrile rubber.	G418(Black)	75	−25 to +130	Special material (for reciprocating shafts, MOY type)	○		
Acrylic Rubber (ACM)	This rubber has the same good oil resistance as ntinle rubber, and has good heat resistance similar to silicone rubber. Weather resistance is also excellent. Resistance to alkalis or water is inferior to that of other types of rubber.	T303(Black)	80	−15 to +150	Standard material (for rotating shafts)	○		○
		T599(Black)	80	−25 to +140	Cold resistance (for rotating shafts)	○		○
		T945(Black)	80	−37 to +160	Heat and cold resistance material (for rotating shafls)	○		○
Silicone Rubber (VMQ)	This rubber is highly resistant to heat, cold, and weather, but its resistance to alkalis or water is inferior to that of other types of rubber.	S728(Black)	80	−45 to +170	Standard material (for rotaitng shafts)	○		
		S817(White)	75	−45 to +170	Compliance with the Food Sanitation Law (for rotating shafts)			○
Fluorocarbon Rubber (FKM)	This rubber has heat resistance surpassing that of silicone. It also has excellent resistance to oils and chemicals. This material is the best rubber for oil seals due to its well-balanced characteristics.	F585(Brown)	75	−15 to +200	Standard material (for rotaitng shafts)	○		○
		F975(Brown)	80	−15 to +200	Special material (for reciprocaitng shafts)	○		○
		F548(Black)	85	−16 to +200	Pressure resistance (for rotatlng shafts)	○		○
		F129(Black)	70	−15 to +200	Special material (VR type)			○
Ethylene-Propylene Note(1) Rubber (EPDM)	This rubber has excellent resistance to water, polar solvents, inorganic chemicals, and weather. Its oil resistance is inferior.	–	–	–	–	–		
Styrene-Butadien Note(1) Rubber (SBR)	This rubber has excellent resistance to polar solvents and water. Its oil resistance is inferior.	–	–	–	–	–		
Tetrafluoroethylene Resin (PTFE)	This material has the maximum degree of resistance to heat, cold, chemicals, and weather, and a lower coefficient of friction. It is not as elasitc as rubber.	31BF(Black)	Durometer D 65	(−50) to +220	Special material (J type), resistance to chemicals and heat, low friction	○		○
		40WF(White)			Compliance with the Food Sanitation Law (for rotaitng shafts)			○
Fabric	Since the primary material is synthetic fiber, resistance to heat and fraying is superior to that of conventional felt.	31FH(Black)	–	(−50) to +160	Material for secondary/dust lips, air permeability	–		

Please consult with NOK if using these materials.
Please refer to page 25 for details on the materials used for parts listed in the catalog.

Note(1): We also offer such materials as ethylene propylene rubber and styrene butadiene rubber that can be utilized in specialized applications.
Note(2): For details on resistance of various lip materials to sealing fluids, see page 62 through 79.
Note(3): Oilr esistance does notin clude resistance to phosphoric ester or water-glycol fire resistant fluid.

Remarks: ◎ Resistant
○ Resistant Except in Special Cases
△ Not Resistant Except in Special Cases
× Not Resistant

Rubber Type	Oil Resistance Note(3)	Alkali Resistance	Acid Resistance	Water Resistance	Weather Resistance	Abrasion Resistance	Oil and Chemical Compatibility																																		
							Engine Oil		Gear Oil			Brake Fluid						Fire Resistant Fluid			Grease			Refri-gerants																
							SEA #30	SEA 10W-#30	Automotive	Class 2 industrial use (extreme-pressure), synthetic base	Torque converter Oil, ATF	DOT 3 (glycol base)	DOT 5 (glycol base)	DOT 5 (silicone base)	Class 2 Turbine Oil	Machine Oil (No.2 spindle oil)	Hydraulic Fluid (mineral oil base)	Phosphate Base	Water + Glycol Base	Cutting Fluid	Mineral Oil Base	Silicone Base	Fluorine Base	R12 + Paraffin Base	R134a+Glycol Base	Gasoline	Light Oil, Kerosene	Heavy Oil	Anti-Freeze Solution (ethylene glycol base)	Water, Warm Water	Sea Water	Water, Steam	10% Hydrochloric Acid Solution	30% Sulfuric Acid Solution	10% Nitric Acid Solution	40% Sodium Hydroxide Solution	Benzene	Ethyl Alcohol	Methyl Ethyl Ketone
Nitrile Rubber (NBR)	◎	○	○	○	△	◎	◎	◎	◎	◎	◎	△	△	◎	○	○	◎	×	○	○	◎	◎	◎	○	△	△	△	○	○	○	○	×	○	△	×	○	×	○	×
Hydrogenated Nitrilel Rubber (HNBR)	◎	○	○	○	○	◎	◎	◎	◎	◎	◎	×	×	◎	○	○	◎	×	○	◎	◎	◎	◎	◎	○	○	○	◎	○	◎	◎	○	○	△	△	◎	×	○	×
Acrylic Rubber (ACM)	◎	×	△	△	◎	◎	◎	◎	◎	△	◎	×	×	◎	◎	○	◎	×	×	△	◎	◎	◎	×	×	×	×	△	×	×	×	×	○	△	×	×	×	×	×
Silicone Rubber (VMQ)	○	×	△	△	◎	○	◎	○	△	△	×	○	○	×	△	×	△	◎	△	△	◎	×	◎	×	×	×	×	×	△	○	×	×	○	×	×	×	×	○	△
Fluorocarbon Rubber (FKM)	◎	△	○	○	◎	◎	◎	◎	○	○	○	×	×	◎	◎	◎	◎	△	△	◎	◎	◎	△	×	×	○	◎	◎	×	○	○	×	○	△	△	×	×	○	×
Ethylene-Propylene Note(1) Rubber (EPDM)	×	○	○	◎	◎	○	×	×	×	△	×	○	○	○	×	×	×	×	×	×	×	◎	◎	×	◎	×	×	×	◎	◎	◎	○	◎	○	○	◎	×	◎	×
Styrene-Butadien Note(1) Rubber (SBR)	×	○	△	○	△	◎	×	×	×	△	×	○	○	○	×	×	×	×	×	×	×	○	○	×	×	×	×	×	◎	◎	◎	△	○	△	×	◎	×	◎	×
Tetrafluoroethylene Resin (PTFE)	◎	◎	◎	◎	◎	◎	◎	◎	◎	◎	◎	◎	◎	◎	◎	◎	◎	◎	◎	◎	◎	◎	◎	◎	◎	◎	◎	◎	◎	◎	◎	◎	◎	◎	◎	◎	◎	◎	◎
Fabric	◎	◎	◎	◎	◎	◎	–	–	–	–	–	–	–	–	–	–	–	–	–	–	–	–	–	–	–	–	–	–	–	–	–	–	–	–	–	–	–	–	–

b. Temperature Range

To safeguard the function of the oil seal, careful attention is required regarding the application's operating temperatures, as temperature directly affects the both the seal and the fluids.

Rubber is sensitive to changes in temperature. A change in rubber at higher temperatures produces a chemical change in which elasticity is lost because the high polymers of the rubber are excessively cut or bonded due to heat, oils, chemicals or ozone. Therefore, the proper working temperature can be determined by the correlation between temperature and time. For example, relatively high temperatures may be used for short periods of time. Conversely, lower temperatures may be used for longer periods of time.

Another change in rubber properties at very low temperature is hardening caused by less active polymers. This reversible phenomena is dependent on temperature only. The normal rubber-like elasticity of an oil seal is recovered when the ambient temperatures return to normal. Temperatures shown in the temperature range are based on the following codes.

(a) Upper Temperature Limits

This provides a general standard for understanding oil seal functioning and operating temperatures.
The limits given here also take into consideration the results of air-heat aging tests.
Is defined as the highest temperature that allows a maximum tensile strength change of 630%, an elongation change of -50%, or a hardness change of 615 points after the completion of a 70-hour air-oven aging test. [This maximum temperature applies to the heat-resistant reference temperature for material evaluation as defined in ASTM (The American Society for Testing and Materials) D2000 Line Call-outs.]

(b) Lower Temperature Limits

TR is an abbreviation for "temperature-retraction," as defined in JIS K 6261. TR represents the recovery properties during low temperatures, and nearly equals the recovery properties of rubber-like elasticity.
The TR10 value indicates the temperature when a given strain is recovered by 10%. Fig. 4-1 shows a typical TR curve. [The TR10 value is used to determine the low temperature limits]

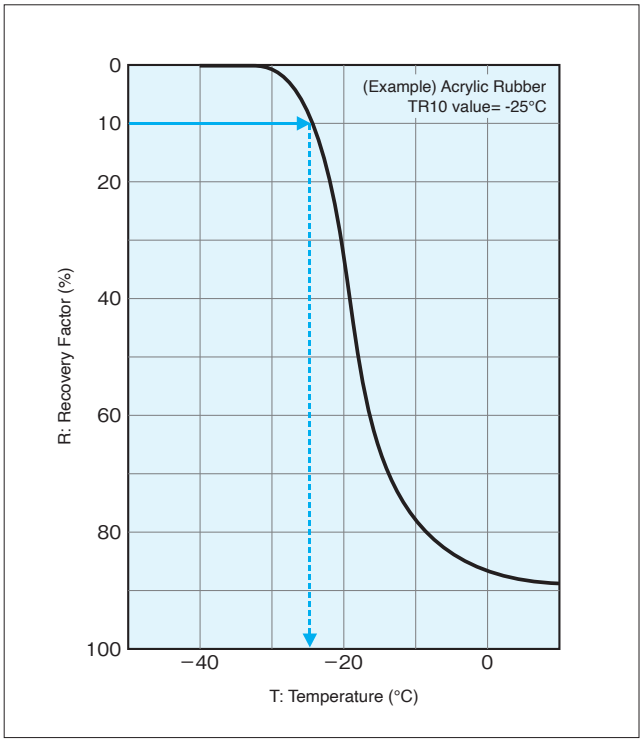

Fig. 4-1 TR Diagram

Cold Temperature Resistance of Oil Seals

The cold temperature resistance of an oil seal is determined by a complicated interaction of various elements, such as the characteristics of the lip material and fluids to be sealed, shaft run-out, and start up speed.

The lip of the oil seal flexes only a few percent when the run-out of the shaft is only a few percent.

Therefore, NOK uses the TR10 value for lip materials as an index of the lowest allowable temperature. Under actual use conditions, even if the temperature is lower than the TR10 value, the temperature at the sealing edge increases due to friction immediately after start-up, allowing rubber-like elasticity to be recovered and thus retain good sealing performance.

However, even if the temperature is higher than the TR10 value, leakage may occur if the shaft run-out is too severe for the lip to follow properly. Thus, it is dangerous to determine the allowable temperature of oil seals solely on the TR10 value. These and other factors mentioned should be taken into consideration.

(2) Garter Springs and Metal Cases

NOK's garter springs and cases are made from the materials shown in Table 4-2.
Standard materials for garter springs and cases are used in oil seals for lubricant or grease sealing.
Special materials are used for sealing water, corrosive chemicals, or gas.

Table 4-2 Types and Applications of Garter Spring and Metal Case Materials

Spring and metal case materials / Fluid to be Seale	Garter spring			Metal Case		
	Standard materials	Special materials		Standard materials	Special materials	
	JIS G 3521 SW (hard-drawn copper wire) JIS G 3522 SWP (piano wire)	JIS G 4309 SUS (stainless steel wire)		JIS G 3141 SPCC (cold-rolled steel sheet and strip) JIS G 3131 SPHC (hot-rolled steel sheet and strip)	JIS G 4305 SUS (cold-rolled stainless steel sheet) JIS G 4307 SUS (cold-rolled stainless steel strip)	
		304	316		304	316
Lubricants, grease	○	○	○	○	○	○
Water	×	○	○	×	○	○
Steam	×	○	○	×	○	○
Sea water	×	×	○	×	×	○
Acids	×	×	○	×	×	○
Alkalis	×	○	○	×	○	○

Remarks: ○ Can be used
× Do not use

The Function of a Garter Spring

A garter spring increases and maintains the pressure of the sealing lip on the shaft. Since garter springs used in oil seal have the characteristics shown in Fig. 4-2, it is possible to obtain the load necessary for good sealing with little elongation. As shown in Fig. 4-2, even if a garter spring is elongated to some extent, the spring load does not change significantly.

The length of a garter spring in an oil seal is determined by considering the proper amount of elongation required to ensure that it can function properly within the working range defined in Fig. 4-2.

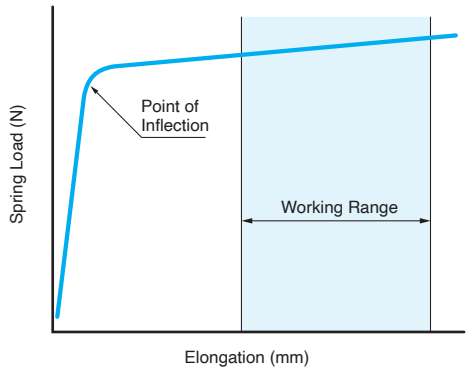

Fig. 4-2 Characteristics of Garter Springs Used in Oil Seals

The Function of a Metal Case

Cases plays an important role in maintaining the retention strength between the seal and the housing bore, thus keeping the seal lip at its intended position.

5. OIL SEAL APPLICATION GUIDE

To ensure optimal performance, it is necessary to select the appropriate oil seal type and material for the actual operating conditions.

This chapter describes selection process and permissible temperature ranges for each type of oil seal listed in this catalog.

If the oil seal you need (type, material, or dimensions) is not listed in this catalog, please contact us regarding customized products.

(1) Selection Process

Use the following steps to select your oil seal.

❶Select the Seal Type

Select the proper seal type per Fig. 5-1 "Flowchart for Seal Type Selection" on pages 26 and 27.

❷Select the Seal Lip Material

Since lip materials for catalog products should be selected according to the appropriate conditions for each oil seal type.

Make sure to check the following items when selecting lip materials.

- Types, Features, Allowable Operating Conditions of Standard Oil Seals… Pages 10 through 11, Table 3-2.
- Types, Features, Allowable Operating Conditions of General Oil Seals… Pages 12 through 15, Table 3-3 and Table 3-4.
- Oil and Chemical Resistance Ratings of NOK Lip Materials… Pages 62 through 79
  Make sure to check whether the product is usable or not by referring to the lip material resistance column.

Reference: Since allowable temperatures will also differ for each type of oil, we also ask that you refer to page 19, Table 3-7.

❸Select the Metallic Materials

The metallic materials for garter springs and cases should be selected by the appropriate oil seal type, same as lip materials.

After checking the following items to verify whether they can be used or not, please select the metallic materials you wish to choose.

- Metallic Materials by Oil Seal Type… Page 25, Table 5-2.
- Types and Applications of Garter Spring and Metal Case Materials… Page 23, Table 4-2.

❹Select the Dimensions

Check whether the dimensions of the oil seal you want matches the shaft diameter, housing diameter, and width of the relevant area by beginning on page 89 "Type and Size List of NOK Seals.

Please consult separately if you plan to use the product in food appliances.
Please do not use catalogue items for aircraft/nuclear related equipment/railways and consult individually.
The oil seals described in this catalog are not designed or manufactured to be suitable for medical devices and should not be used for medical device applications where they are implanted into human bodies or come into contact with body fluids or biological tissues.

(2) Product type and materrial

Materials for the oil seal lips, garter springs, and cases described in this catalog must be selected according to the applicable usage conditions for each oil seal type.

Table 5-1 Lip Materials by Oil Seal Type

NOK Type Designation	Shaft Diameter mm	Lip Materials													
		A727	A103	A104	A795	A134	A941	A571	T303	S728	F585	F548	F129	31BF	31FH
SC, SB, TC, TB	150 or less	○							○	○	○				
	Over 150						○		○	○	○				
TCK		○													○
VC, VB	150 or less	○													
	Over 150						○								
KC, KB		○													
TCV					○							○			
TCN					○							○			
TCZ					○							○			
TC4, TB4					○										
TCJ			○						○					○	
OC		○													
QLFY								○							
VR						○							○		
SBB							○								
MG			○	○											
SA1J, VAJ, KA3J														○	

Table 5-2 Metallic Materials by Oil Seal Type

NOK Type Designation / Material	All types except those listed on the right	SA1J, VAJ, KA3J
Garter spring	JIS G3521 SW JIS G3522 SWP※	JIS G4309 SUS304
Metal case	JIS G3141 SPCC JIS G3131 SPHC	JIS G4305 SUS304 JIS G4307 SUS304

*We have prepared separate SUS spring specifications for each of the individual model dimensions, and you can refer to these on pages 148 through 151.

Table 5-3 Advantages and Disadvantages of Outer Periphery Type B/C

Outer Periphery Shape	Outer Periphery Type B	Outer Periphery Type C
Shape	 SB type	 SC type
Advantages (features)	Oil seal is difficult to dislodge and it exhibits superior positioning properties.	Since the rubber grips onto the roughness of the housing's inner surface, it is capable of ensuring sealing performance even under pressurized conditions.
Disadvantages (precautions)	Since bleeding and leakage occur at locations where pressure is generated, it cannot be used in such locations. It cannot be used for housings made of materials that are prone to exhibiting severe heat deformation, such as aluminum, etc.	Under high-pressure conditions, caution must be exercised to prevent falling out, and it must be designed with a seal pressing structure in such cases.

(3) Flowchart for Seal Type Selection

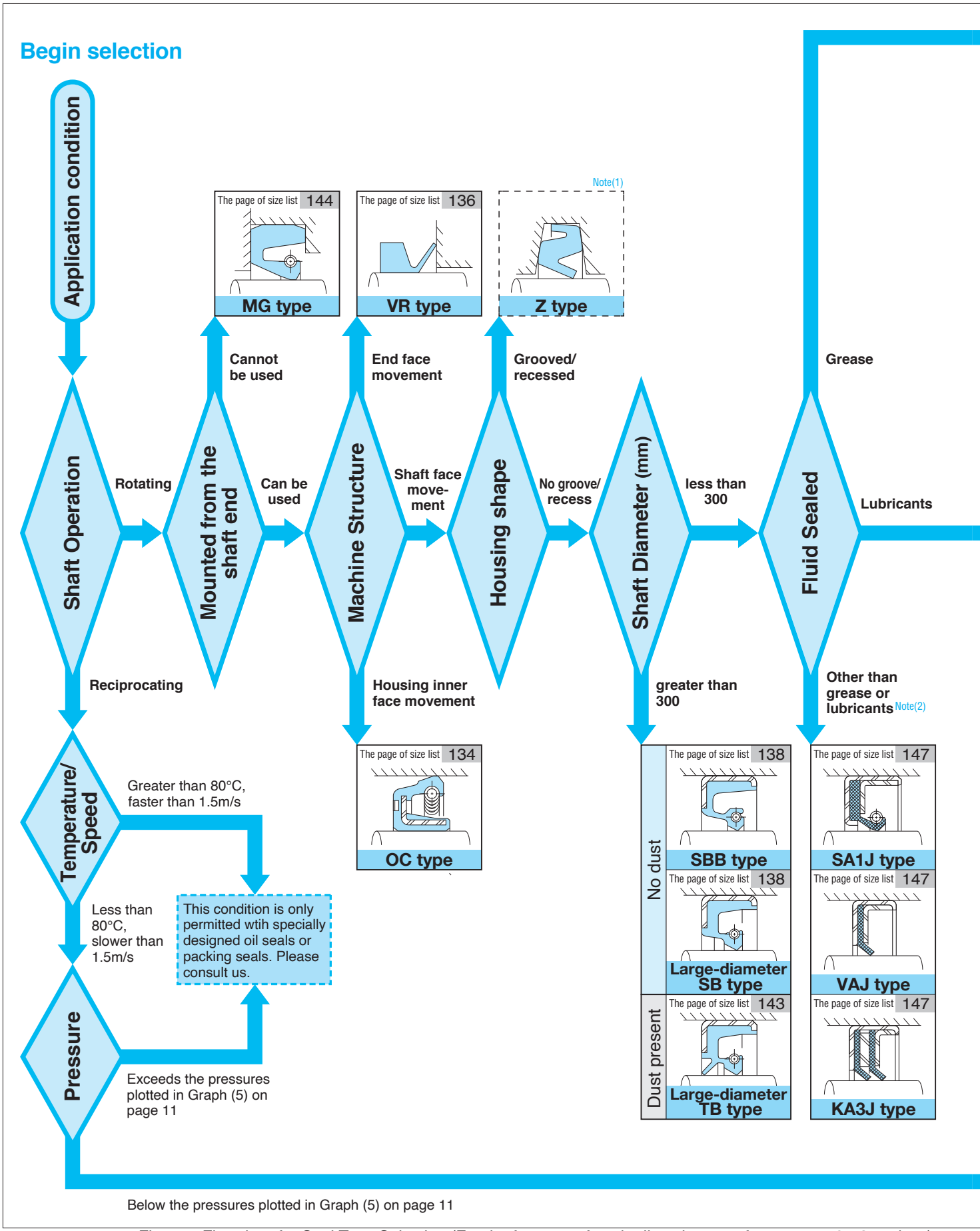

Fig. 5-1 Flowchart for Seal Type Selection (For the features of each oil seal type, refer to pages 9, 12, and 14.)

Note(1): Catalogues of models ZF and ZT type were discontinued at the end of September 2024.
Details of product specifications and handling are provided in the same manner as for other general oil seal catalogs.
Note(2): You may select any oil seal type, other than SA1J, VAJ and KA3J, depending on the type of fluid sealed (gas, brake oil, gasoline, kerosene, light oil, heavy oil, cutting oil, or water or chemical fluid). Please consult us.
Note(3): In case of "Gas seal", please consult us.
Note(4): When the housing material is a light alloy* or resin having a large coefficient of thermal expansion, select a seal with a rubber exterior. For other housings, you may select either a rubber or metal exterior design.
Note(5): When you cannot make a selection from this flowchart for other application conditions (such as vacuum or negaitve pressure), please consult us.
*Light alloys are alloys that are lighter than steel. Light metals include aluminum, magnesium, titanium, and beryllium, etc.

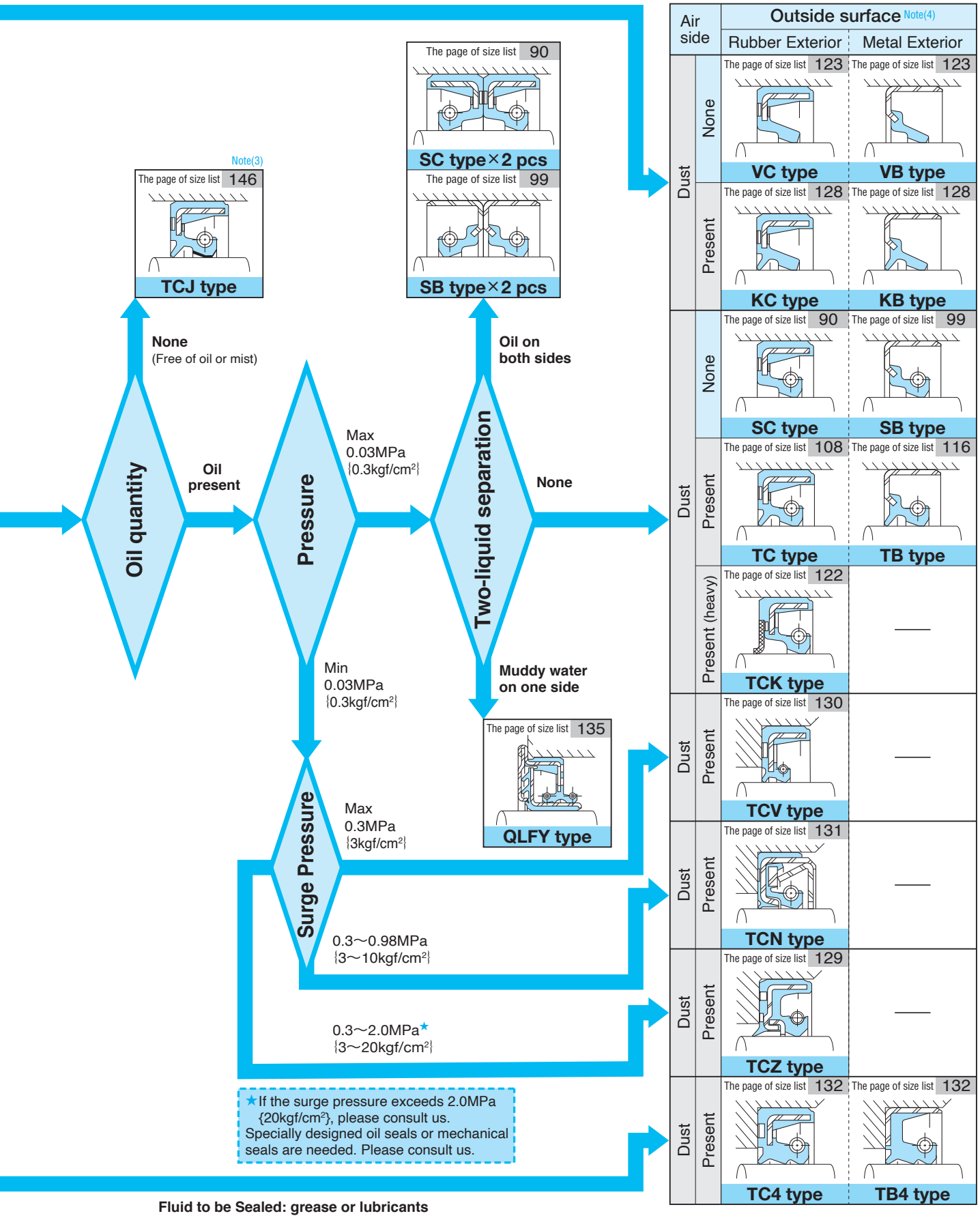

Fluid to be Sealed: grease or lubricants

Example 1

A SC-type oil seal was selected based on the working conditions shown on the right. Now, let's select a proper rubber material.

(Selected 3000 rpm from the graph in Fig. 3-2 on page 18.)

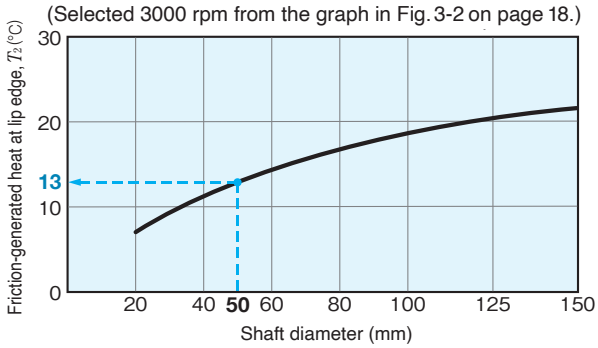

Item	Description
Shaft operation	Rotating
Installation	Oil seal can be installed from shaft end
Fluid to be sealed	Engine oil (SAE #30)
Pressure	0.03 MPa {0.3kgf/cm^2} or less
Dust	None
Shaft diameter	50 mm
Shaft speed	3000 rpm

Step 1 What is the sealed fluid and the normal operating temperature?

Type of fluid sealed ····· Engine oil (SAE #30)

Maximum normal temperature of fluid ····· 80°C

Percentage of time at the maximum normal temperature ····· Approx. 50% of the total working time

Step 2 What is the approximate temperature at the sealing edge?

Maximum normal temperature based on conditions ····· T_1 = 80°C

Friction-generated heat at lip ····· T_2 = 13°C (Read out from Fig. 3-2 on page 18.)

Temperature at the sealing edge ····· $T_0 = T_1 + T_2$

= 80°C + 13°C = 93°C

Step 3 What is the sealed fluid and the normal operating temperature?

What lip material can be used in view of the temperature and the fluid sealed?

The maximum time the oil seal can be used at the maximum normal temperature is approximately 50% of the total working time, and the permissible temperature for the lip material in Table 3-7 on page 19 is

T – 20°C.

Based on the above, the desirable value is $T - 20 > T_0$. From a calculation viewpoint, it becomes $T > T_0 + 20$. Substitute the figures in this equation to obtain

$T > 93 + 20 = 113$°C.

Checking these results against the column "Types of Fluid to be Sealed" (in this case, engine oil SAE #30) in Table 3-7 on page 19, and therefore nitrile rubber (A727) can be selected.

Example 2

A SB-type oil seal was selected based on the working conditions shown on the right. Now, let's select a proper rubber material.

(Selected 6000 rpm from the graph in Fig. 3-2 on page 18.)

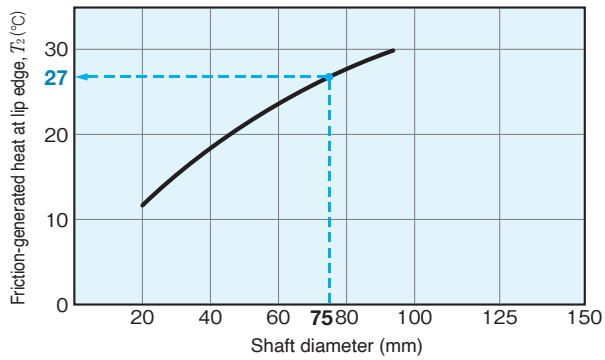

Item	Description
Shaft operation	Rotating
Installation	Oil seal can be installed from shaft end
Fluid to be sealed	Hypoid gear oil (SAE #90)
Pressure	0.03 MPa {0.3kgf/cm^2} or less
Dust	None
Shaft diameter	75 mm
Shaft speed	6000 rpm

Step 1 What is the sealed fluid and the normal operating temperature?

Type of fluid sealed ····· Hypoid gear oil (SAE #90)

Maximum normal temperature of fluid ····· 90°C

Percentage of time at the maximum normal temperature ····· Approx. 20% of the total working time

Step 2 What is the approximate temperature at the sealing edge?

Maximum normal temperature based on conditions ····· T_1 = 90°C

Friction-generated heat at lip ····· T_2 = 27°C (Read out from Fig. 3-2 on page 18.)

Increase by 1.5 times due to gear oil use.

T_2 = 27 × 1.5 = 40°C

Temperature at the sealing edge ····· $T_0 = T_1 + T_2$

= 90°C + 40°C = 130°C

Step 3 What lip material can be used in view of the temperature and the fluid sealed?

Since the time the oil seal will be used at the maximum normal temperature is only approximately 20% of the total working time, the upper limit of the permissible temperature for lip materials in Table 3-7 on page 19 is to be used.

In other words, when you substitute

130°C in T_0 in $T > T_0$,

you obtain T > 130°C.

Check this result against the column "Types of Fluid to be Sealed (hypoid gear oil) in Table 3-7 on page 19 to select acrylic rubber T303.

Note that since T_0 = 130°C is the upper limit of the permissible temperature for acrylic rubber, you must select the lip material immediately above, i.e., fluorocarbon rubber (F585).

6. HOUSING AND SHAFT DESIGN GUIDE

This section describes the design specifications for the shaft and the housing where oil seals are installed.

Table 6-1 shows reference table numbers and page numbers for the design specifications for shafts and their chamfered ends, as well as for housings and their respective chamfers, arranged by oil seal type.

Table 6-1 Page Directory to Shaft and Housing Design Specifications by Seal Type

Item \ NOK Seal Type		SC, SB, TC, TB, TCK, VC, VB, KC, KB, TCV, TCN, TCZ, TC4, TB4, TCJ, SA1J, VAJ, KA3J, QLFY	SBB, Large-diameter SB, Large-diameter TB	MG	OC	VR, ZF, ZT Note(1)
Shaft	Design specifications	Table 6-2 on page 30			Table 6-11 on page 42	Table 6-12 on page 43
	Chamfer specifications	Table 6-3 on page 31	Table 6-4 on page 31	Table 6-3 on page 31		Table 6-3 on page 31
Housing	Design specifications	Table 6-6 on page 36		Table 6-10 on page 41	Table 6-11 on page 42	Table 6-12 on page 43
	Chamfer specifications	Table 6-7, 6-8 on page 38, 39	Table 6-9 on page 40			

Note(1): Catalogues of models ZF and ZT type were discontinued at the end of September 2024.
Details of product specifications and handling are provided in the same manner as for other general oil seal catalogs.
Note(2): Please consult us regarding the design of the shaft and housing for OKC3 type, W type, MO type, and MOY type oil seals.

(1) Shaft

a. Shaft Design Specifications, Chamfer Properties

Table 6-2 shows shaft design specifications, and Tables 6-3 and 6-4 show the shape and size of the required shaft chamfers.

Table 6-2 Shaft Design Specifications

Specification Item \ NOK Seal Type	SC, SB, TC, TB, TCK, VC, VB, KC, KB, TCV, TCN, TCZ, SBB, Large-diameter SB, Large-diameter TB	TCJ, SA1J, VAJ, KA3J,	TC4, TB4	QLFY
Shaft material	Carbon steels for machine structural use			
Surface hardness	30 HRC or more	50 HRC or more	30 HRC or more	
Surface roughness	(0.32~0.1)μm Ra (2.5~0.8)μm Rz		(0.2~0.05)μm Ra (1.6~0.4)μm Rz	(3.2~1.6)μm Ra (12.5~6.3)μm Rz
Machining method	Plunge ground		After heat treatment, plate with hard chrome before final polishing.	Lathe cut
Dimensional tolerances	JIS h9			JIS h8

Note(3): To use oil seals with a silicone rubber lip, finish the shaft surface roughness at 1.6 to 0.6μm Rz.
Note(4): For details on shaft machining, refer to “Proper Shaft Machining Methods” on page 34.
Note(5): To get surface hardness 30 HRC or more, generally need heat treatment.

The notation of surface roughness on the catalog comply with JIS B 0601: 2001

Table 6-3 Shaft Chamfer Design (**for shaft diameter of 300 mm or less**) Units: mm

NOK Seal Type / Shaft diameter	**SC, SB, TC, TB, TCK, VC, VB, KC, KB, TCV, TCN, TCZ, TC4, TB4, MG, VR, ZF, ZT** Note	**TCJ, SA1J, VAJ, KA3J,**	**QLFY**
Shaft diameter d	d_1		
10 or less	d–1.5	d–3.5	–
Over 10 to 20 or less	d–2.0	d–4.0	
Over 20 to 30 or less	d–2.5	d–4.5	d–1.5
Over 30 to 40 or less	d–3.0	d–5.0	
Over 40 to 50 or less	d–3.5	d–5.5	
Over 50 to 70 or less	d–4.0	d–6.0	
Over 70 to 95 or less	d–4.5	d–6.5	d–2.0
Over 95 to 130 or less	d–5.5	d–7.5	
Over 130 to 240 or less	d–7.0	d–9.0	–
Over 240 to 300 or less	d–11.0	d–12.0	

The diameter d_1 in the table is less than the inside diameter of the sealing lip. Rem ember that a correct seal installation neither damages the sealing lip nor detaches the garter spring. Be sure to conform to the relevant size shown in the table.

The smaller roughness at shaft chamfer (less than Ra 3.2) makes your shaft inserting operation easier.

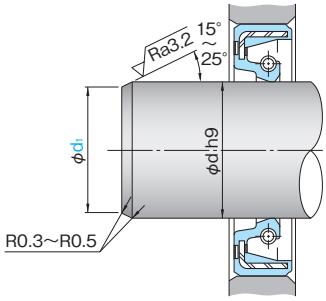

Note: Catalogues of models ZF and ZT type were discontinued at the end of September 2024.
Details of product specifications and handling are provided in the same manner as for other general oil seal catalogs.

Table 6-4 Shaft Chamfer Design for **SBB type**, **Large-diameter SB type** and **Large-diameter TB type** Oil Seals (**for shafts over 300 mm in diameter**) Units: mm

NOK Seal Type / Shaft diameter	**SBB, Large-diameter SB, Large-diameter TB**	
Shaft diameter d	d_1	
Over 300 to 400 or less	d–12	
Over 400 to 500 or less		
Over 500 to 630 or less	d–14	
Over 630 to 800 or less		
Over 800 to 1000 or less	d–18	
Over 1000 to 1250 or less		
Over 1250 to 1600 or less	d–20	
Over 1600 to 2000 or less		

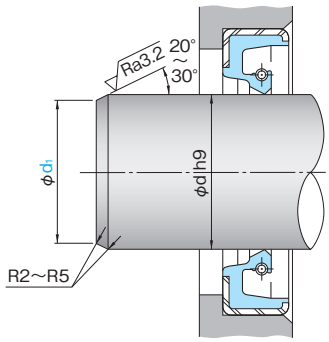

The notation of surface roughness on the catalog comply with JIS B 0601: 2001

b. Shaft Design Concepts

The material, hardness, and machining method of the shaft has a significant influence on the performance of the oil seal. Design specifications for the shaft need to be determined after careful examination of all relevant factors.

(a) Shaft Material

In addition to carbon steel for mechanical construction, cast iron, resin and other materials are used for shaft material. Before using these materials, please refer to the precautions in Table 6-5.

Table 6-5 Notes on Usage

Shaft Material	Notes on Usage
Cast Iron	Pinhole porosity tend to appear in cast iron shafts. Leakage can occur if the pinhole size is greater than 0.05 mm and the seal lip rides over this pinhole. This is because the shaft contact to the seal lip is lost locally and rapidly. If you must use a cast iron shaft, NOK recommends using a nodular graphite cast iron shaft.
Plastics	NOK does not recommend using plasitc shafts. It is difficult to insure proper hardness and surfasce finish, and heat dissipation is poor due to low heat transfer qualities.
Ceramics	Ceramic shafts are sometimes used in chemical devices, but we do not recommend them because the unique roughness of the surface can promote lip wear and significantly reduce the performance of oil seals. If you have to use it, please consult us in advance.

(b) Shaft Hardness

The surface of the shaft where the oil seal lip contacts should be at least 30 HRC.

This is due to the following reasons:

❶ The shaft surface will not be easily scratched or dented.
❷ An appropriate surface finish can be easily machined.
❸ The shaft (especially a hollow shaft) will not deform easily.
❹ To minimize the shaft wear

Dents are easily overlooked, however, and it is important to take care that the shaft is not damaged by contact during shipping and assembly.

For use with J type (PTFE) seals, the shaft surface under the seal lip needs to be as hard as 50 HRC or more, as the J type oil seal is more likely to increase wear on the shaft compared to other oil seals. The J type oil seal is used for fluids with poor lubricity, such as chemicals or solvents, and in high temperature areas or under poor lubrication conditions. Therefore, a shaft with a hardness of less than 50 HRC will quickly wear out.

(c) Shaft Finish and Machining Method

Generally, the shaft roughness directly affects the degree of seal leakage and wear (this varies according to shaft speed and oil quantity) regardless of the shaft hardness. Therefore, it is important to use shafts with the surface finish roughnesses listed in Table 6-2.
For rotating shaft oil seals, special attention is needed. If machining flaws run continuously along the shaft, leaks may occur even if the surface roughness of the shaft is within a range of 2.5 to 0.8 μm Rz (excluding TC4 type, TB4 type, QLFY type and silicone rubber oil seals).

The following section discusses proper and improper machining methods (i.e., introducing machine lead onto the shaft through poor machining practices). (Please refer to pages 34 through 35.)
In case of shaft for reciprocating, please consult us .

The notation of surface roughness on the catalog comply with JIS B 0601: 2001

(d) Shaft Chamfer

If there is a sharp corner at the shaft's end, the seal lip will be damaged when the oil seal is installed over the shaft, thus causing a leak. Also, if the shaft is not properly chamfered, the sealing lip might get caught on the corner as shown in Fig. 6-1, causing lip "turn-under" and possible garter spring ejection. Therefore, the shaft should be properly chamfered as shown in Tables 6-3 and 6-4.

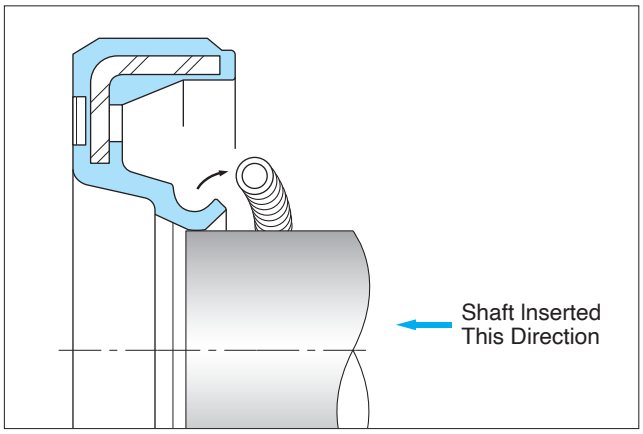

Fig. 6-1 Lip "Turn-Under" and Garter Spring Ejection

(e) Shaft Key Ways and Splines

Even if the shaft is properly chamfered per Tables 6-3 and 6-4, the seal lip may be damaged if there is a key way or spline on the shaft surface which the lip contacts during installation.

If a key way or spline must be used on the shaft surface that will pass under the seal's lip during installation, make the nominal diameter of the key way or spline 5 to 15mm smaller than the diameter of the shaft's seal journal so that a cover may be used, as shown in Fig. 6-2.

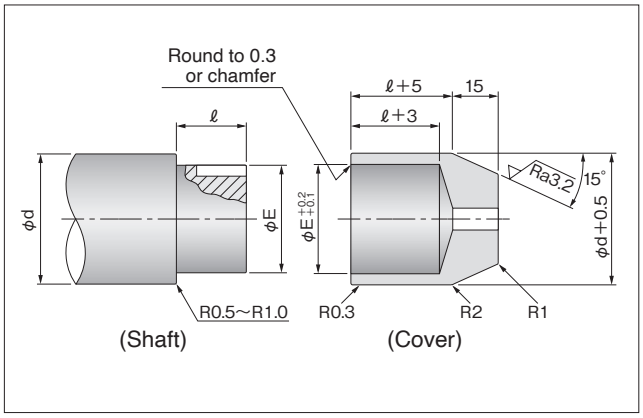

Fig. 6-2 Cover Design for Key Ways or Spline

(f) Miscellaneous

If a shaft's bearing journal is the same diameter as the shaft's seal journal, the shaft will be scratched from bearing installation, and thus cause a leak path under the seal lip. Instead, design the shaft's bearing journal to be larger than that of the seal journal, thus avoiding shaft damage in the critical seal lip area of the shaft.

The notation of surface roughness on the catalog comply with JIS B 0601: 2001

Proper Shaft Machining Methods

6

Ground Finish

Plunge grinding produces non-continuous machining striation markings that are at right angles to the shaft centerline, as shown in the photograph on the right. This is the optimum finish technique for best seal life and performance. After plating with hard chromium to improve resistance to corrosion and wear, be sure to plunge-grind the final surface.

Shaft surface

Shaft centerline

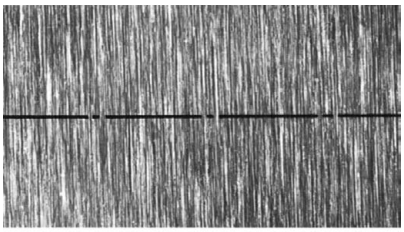

Roughness trace

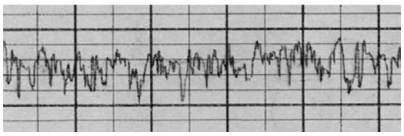

Emery Paper Finish

(a finishing method that does not involve moving the paper axially)

Emery paper finishing without axial movement produces non-continuous machining striation markings that are at right angles to the shaft centerline, as shown in the photograph on the right.

This "plunge" action surface is therefore also very suitable for oil seals.

Note that excessive force on the paper may produce deep scoring on the shaft.

Shaft surface

Shaft centerline

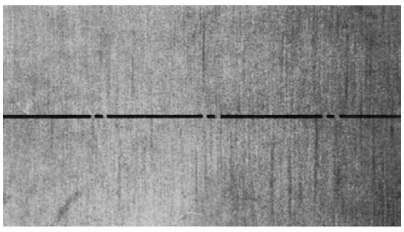

Roughness trace

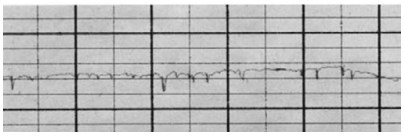

How to Minimize Shaft Wear

A shaft may experience wear even if it is treated via induction or carburizing hardening processes. This is primarily due to dust, earth and sand, or silica (SiO_2) or alumina (Al_2O_3) contained in deteriorated oil. These minute foreign particles can enter into the contact area of the sealing lip either from the air or oil side. To protect the shaft from wear caused by particles from the air side, NOK recommends using a dust seal together with an oil seal, or selecting an oil seal with higher dust resistance.
When the oil contains high levels of silica or alumina, shaft wear can be reduced by changing the oil at appropriate intervals. In addition, hard chromium plating of the shaft or using hard chromium plated sleeve shafts is recommended.

Grindstone Dressing

Take care when dressing the grindstone for plunge ground finishing. If the grindstone incurs directional lead during the dressing, the lead will transfer to the shaft.

NOK recommends roller dressing. If single-point dressing is unavoidable, use a slow feed rate and be sure to spark-out during grinding.

Roller dressing: A dressing method where large numbers of diamonds are embedded on the outer periphery surface of the shaft object and rotated.

Spark-out : This refers to the act of grinding until the wheel stops cutting and no more sparks are produced, without making the ratio of wheel speed/working shaft speed an integer ratio.

Improper Shaft Machining Methods

Lathe Cut Finish

Lathe finishing is very distinctive: a roughness curve shows continuous rows of well-shaped triangular peaks and valleys spiralling around the shaft. These spiral valleys can continue from the inner side of the oil seal, through the sealing lip contact area, and to the air side, causing sealed fluid to leak through the valleys via a “screw-pump” action.

Shaft surface

Shaft centerline

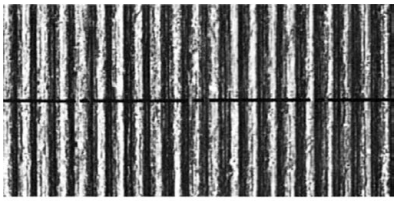

Roughness trace

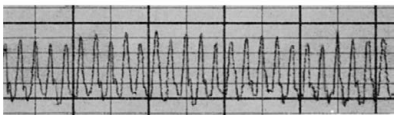

Super-finishing

Super-finishing creates a herringbone-like texture, and reduces roughness compared to other finishing methods. However, this texture also causes seal leakage through the presence of machine lead, which can overpower a seal and pump oil to the air side.
In some cases, this herringbone-like texture can cause premature wear on the seal lip.

Shaft surface

Shaft centerline

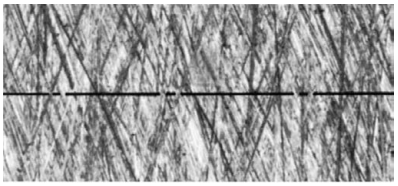

Roughness trace

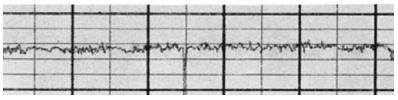

Roller Burnishing

Roller burnishing is generally performed after a lathe cutting operation. The burnishing will not remove the substrate machine lead produced by the lathe, which could cause leakage. Roller burnishing is also prone to producing a too-smooth finish, causing the oil film to become too thin, resulting in increased friction and premature seal wear.

Shaft surface

Shaft centerline

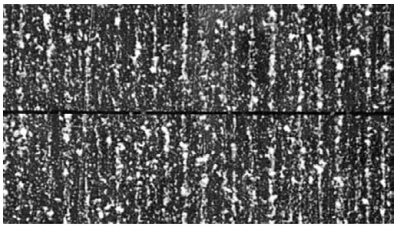

Roughness trace

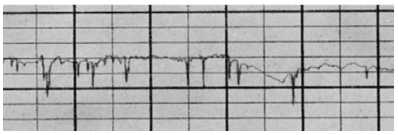

Emery Paper Finishing

(With axial oscillation)

After lathe machining, finishing the surface with emery paper is the easiest and most widely accepted method. However, finishing by moving the emery paper axially produces a herringbone lead texture, causing leaks to occur (similar to super finishing).

Shaft surface

Shaft centerline

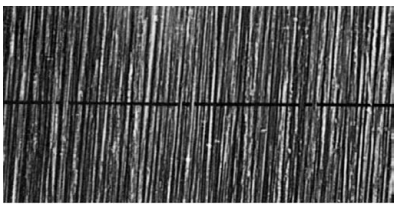

Roughness trace

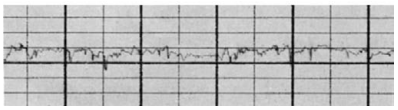

(2) Housing

The housing is the area where a bore recess can receive and retain a seal.
Table 6-6 shows the most desirable design characteristics for housing bores, and Tables 6-7 and 6-8 show the shapes and sizes of various housing bores.

a. Housing Design Specifications

Design specifications for housings are shown in Table 6-6. Refer to Table 6-10 for MG type, Table 6-11 for O type, and Table 6-12 for VR and Z type oil seals.

Table 6-6 Housing Design Specifications

NOK Seal Type / Specification Item		**SC, SB, TC, TB, TCK, VC, VB, KC, KB, TCV, TCN, TCZ, TC4, TB4, TCJ, SA1J, VAJ, KA3J, SBB, Large-diameter SB, Large-diameter TB, QLFY**
Housing material		Metals with low thermal expansion coefficients (Example: Carbon steels for machine structural use)
Bore ID surface roughness	Metal OD oil seal	(3,2~0.4)μm Ra (12.5~1.6)μm Rz
	Rubber OD oil seal	(3,2~1.6)μm Ra (12.5~6.3)μm Rz
Dimensional tolerance	Nominal size: 400mm or less	JIS H8
	Nominal size: Over 400mm	JIS H7

b. Housing Design Concepts

The material, roughness, size, and shape of the housing bore will affect the performance of the oil seal. Determine the design specifications after careful consideration of these factors.

(a) Housing Material

For steel or cast iron housings, use either rubber OD or metal OD seals. Since light alloys or resins generally have high coefficients of thermal expansion, the size of the housing hole increases as the temperature increases.
For metal OD oil seals, leakage may occur in the press-fit area, or the seal itself may become dislodged. If light alloy or plastic housings must be used, use rubber OD seals.

(b) Surface Roughness of Housing Bore (inner diameter surface)

Oil seals prevent leakage by maintaining contact between the sealing edge and shaft and also by obtaining a proper fit to the bore. Thus, care is needed when machining the housing hole. A very rough inner housing surface will create a leak path past the seal. Refer to Table 6-6 for proper roughness levels.

(c) Dimensional Tolerances of Housing Bores

At NOK, we define outside diameter tolerances for oil seals based on JIS H8 for oil seals with 400 mm or less nominal outside diameters and JIS H7 for oil seals with Over 400 mm nominal outside diameters.
If JIS H8 or JIS H7 standards are not used, seal installation may be difficult, cause damage, or even fail to be retained during operation.

The notation of surface roughness on the catalog comply with JIS B 0601: 2001

(d) Housing Bore Design

If excessive weight or pressure is placed on the oil seal, it may become dislodged. No special care is needed if there is no inner pressure on the oil seal (max. 0.03 MPa (0.3 kgf/cm^2)). In applications where the pressure is 0.03 MPa (0.3 kgf/cm^2) or more, design the housing so that it secures the oil seal axially. The shape and size of the housing bores are shown in Table 6-8 on page 39. You can select either configuration ❶ or ❷ in the table. Configuration ❷ allows easy installation and removal of the oil seal. If a snap ring must be used, round (blend) the snap ring groove edges of the bore as shown in ❸.

(e) Split-Type Housing

Avoid using a split-type housing for the following reasons:

①Leakage may occur from the split line area.
②Seal displacement may occur at the split line area.
③It may be difficult to ensure proper roundness of the housing bore.
④Misalignment may occur between the shaft and housing hole.

Items ② and ③ result in leaks at the split line area, and item ④ results in leaks at the sealing lip.

If a split-type housing must be used, machine the housing so that it does not misalign and become ovalshaped, and then use a rubber OD seal in the preassembled housing.
Please refer to Table 6-3 for a depiction of the construction used for split-type housings.

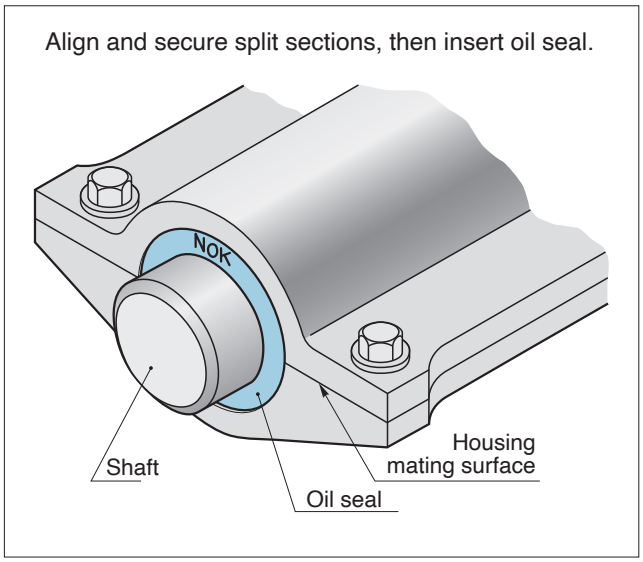

Fig. 6-3 Split-Type Housing

(f) Improper Housing Bore Designs

Fig. 6-4 illustrates two improper housing designs. For case ❶, since stamped steel is used, the hole surface is apt to be tapered and the inside diameter or roundness will vary, causing the oil seal to leak or even become dislodged.

For the housing design in ❷, the housing may be installed off-center, as it uses a combination of screws. Do not use a screwed-in housing.

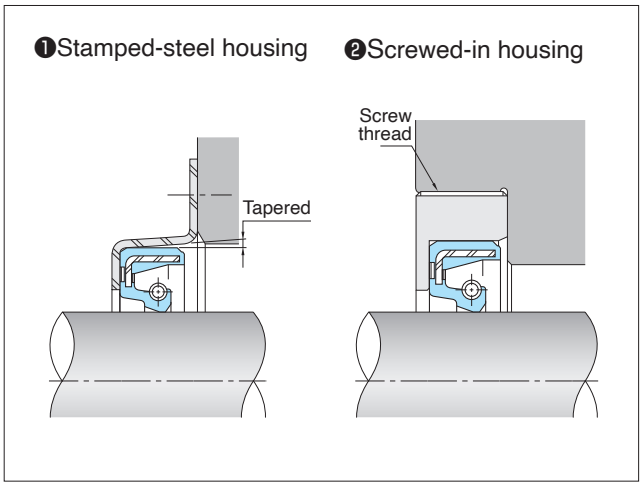

Fig. 6-4 Improper Housing Bore Designs

c. Housing Bore Configuration

The shape and size of a housing bore needs to be determined according to the type and size of the oil seal to be used. Design a housing bore based on the following:

(a) Standard Oil seals

For standard oil seals (with shafts up to 300 mm in diameter), the shape and size of the housing hole varies depending on the pressure in the application.

Non-Pressurized Applications (Max. 0.03 MPa (0.3 kgf/cm^2)

The shapes and sizes of housing bores in non-pressurized applications are shown in Table 6-7.

Table 6-7 Housing Bores for Non-Pressurized Applications

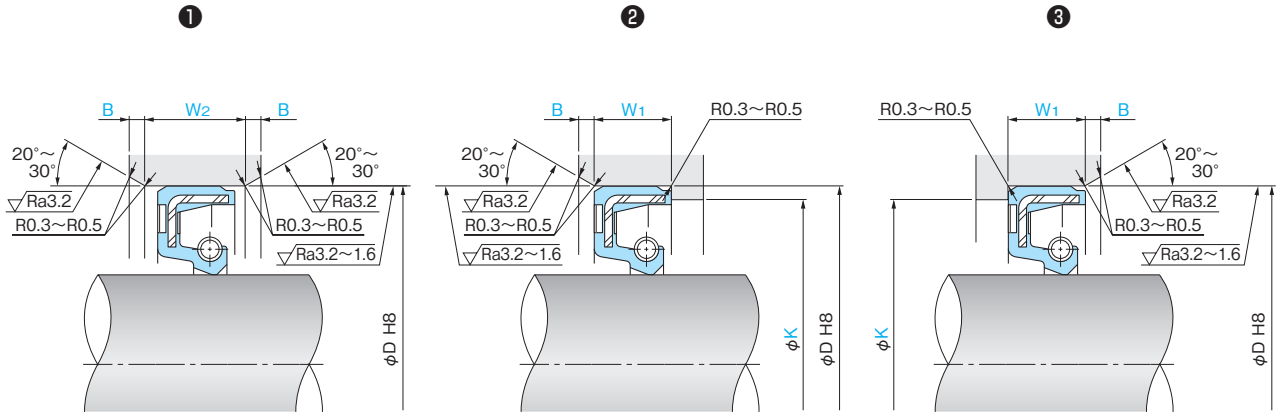

Housing bore size — Units: mm

Nominal width of oil seal (b)	Minimum size of W_1	B	Minimum size of W_2
6 or less	b+0.5	1.0	b+1.0
Over 6 to 10 or less		1.5	
Over 10 to 14 or less		2.0	
Over 14 to 18 or less		2.5	
Over 18 to 30 or less	b+1.0	3.0	b+2.0

Housing bore size — Units: mm

Nominal outside diameter of oil seal (D)	K
50 or less	D−4
Over 50 to 150 or less	D−6
Over 150 to 300 or less	D−8

The notation of surface roughness on the catalog comply with JIS B 0601: 2001

Pressurized Applications (over 0.03 MPa (0.3 kgf/cm^2))

The housing bore designs to be used in the presence of internal pressure are shown in Table 6-8.

Table 6-8 Housing Bore Design for Pressurized Applications

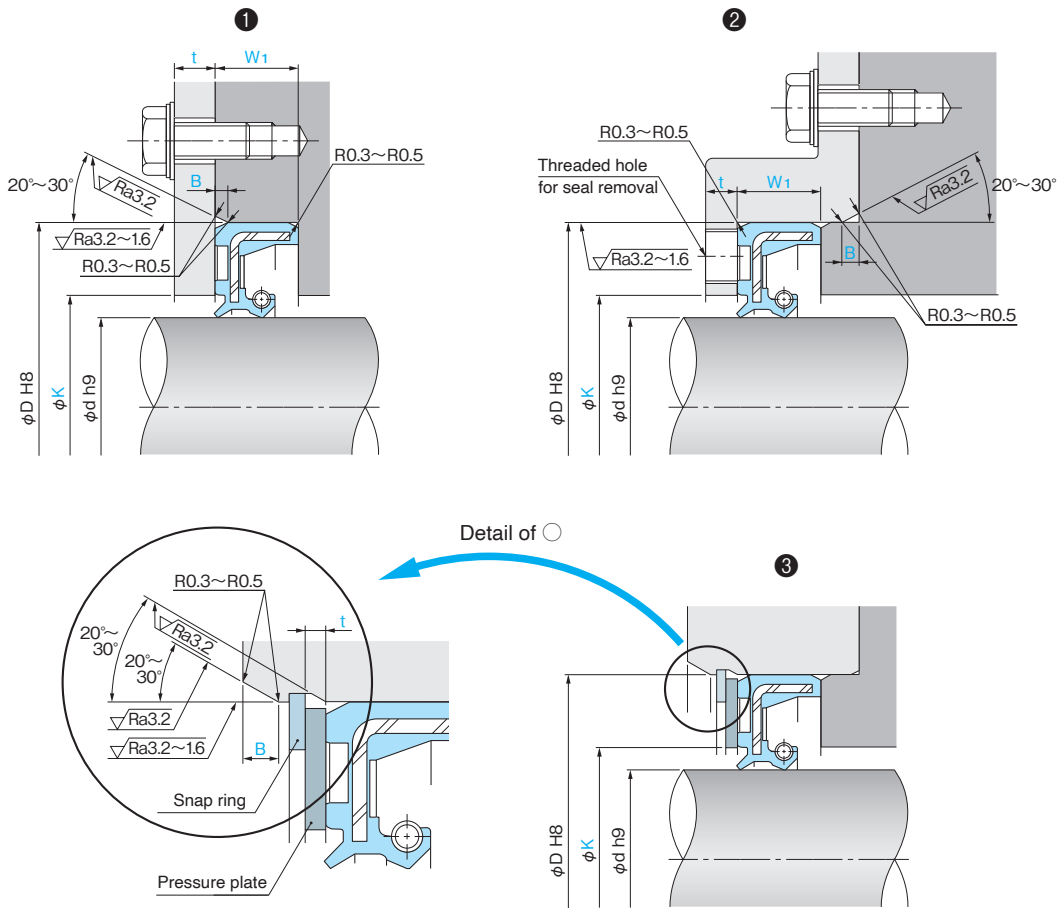

If a snap ring must be used, round (blend) the housing grooves.
Note: Since this can result in scraping and gouging of the oil seal outer periphery, absolutely make sure to apply chamfering.

Housing bore size — Units: mm

Nominal width of oil seal (b)	W_1	B
Over 6 to 10 or less	$b^{+0.3}_{+0.5}$	1.5
Over 10 to 14 or less	$b^{+0.4}_{+0.6}$	2.0
Over 14 to 18 or less	$b^{+0.5}_{+0.8}$	2.5
Over 18 to 30 or less	$b^{+0.6}_{+0.9}$	3.0

Pressure plate size — Units: mm

Nominal outside diameter of oil seal (D)	K	Minimum plate thickness t
50 or less	d+3	3
Over 50 to 120 or less	d+4	5
Over 120 to 250 or less	d+5	8
Over 250	d+6	10

The notation of surface roughness on the catalog comply with JIS B 0601: 2001

(a) Standard Oil seals

For general oil seals, design the housing bore based on the following.

SBB, Large-diameter SB, and Large-diameter TB type Oil Seals

The shape and size of housing holes are shown in Table 6-9.

Table 6-9 Bore Design for **SBB type**, **large-diameter SB type**, and **large-diameter TB type** (shaft over 300 in diameter) Oil Seals

Housing design specifications Units: mm

Nominal outside diameter of oil seal (D)	K
Over 300 to 400 or less	D−10
Over 400 to 500 or less	
Over 500 to 630 or less	D−12
Over 630 to 800 or less	
Over 800 to 1000 or less	
Over 1000 to 1250 or less	
Over 1250 to 1600 or less	D−14
Over 1600 to 2000 or less	

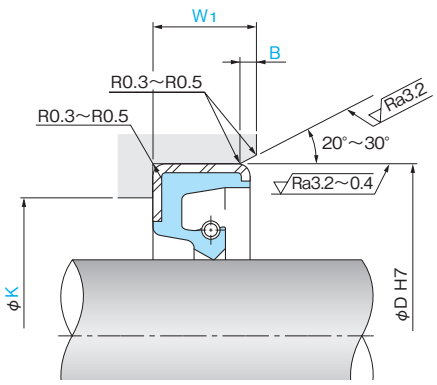

Housing bore size Units: mm

Nominal width of oil seal (b)	W_1	B
6 or less	b+0.5	1.0
Over 6 to 10 or less		1.5
Over 10 to 14 or less		2.0
Over 14 to 18 or less		2.5
Over 18 to 30 or less	b+1.0	3.0

The notation of surface roughness on the catalog comply with JIS B 0601: 2001

MG Type Oil Seal

Design specifications of the housing bores for MG type oil seals are shown in Table 6-10. Since no reinforcing metal case is used in an MG type oil seal, the seal is installed by cutting the seal at one point and butt-jointing the cut ends, which makes it difficult to obtain the proper retention strength.
Therefore, the housing bore must be designed so that the oil seal sits at the correct position and is secured by pressure from both sides.

Table 6-10 Housing Bore Design Specifications for **MG Type** Oil Seals

Housing design specifications

Item		Specification
Housing material		Metals with low thermal expansion coeficients (Example: Carbon steels for machine structural use)
Bore inner diameter surface roughness		(3.2~1.6)μm Ra (12.5~6.3)μm Rz
Method		Machining
Dimensional tolerances	400mm or less nominal outside diameter	JIS H8
	Over 400mm nominal outside diameter	JIS H7

Housing bore size

Units: mm

Nominal width of oil seal (b)	W	B
6 or less	$b^{-0.1}_{-0.2}$	1.0
Over 6 to 10 or less	$b^{-0.1}_{-0.3}$	2.0
Over 10 to 14 or less	$b^{-0.1}_{-0.4}$	3.0
Over 14 to 18 or less	$b^{-0.1}_{-0.5}$	4.0
Over 18 to 30 or less	$b^{-0.1}_{-0.6}$	5.0
Over 30	$b^{-0.1}_{-0.7}$	6.0

Housing bore, pressure plate, and mounting bolt

Units: mm

Nominal outside diameter of oil seal (D)	C	Pressure plate		Mounting bolt	
		Minimum plate thickness t	K	Size	Quantity
50 or less	d+ 8	3	d+ 3	M 6	4 (equally spaced)
Over 50 to 125 or less	d+10	5	d+ 5	M 8	4 (equally spaced)
Over 125 to 315 or less	d+18	10	d+ 8	M10	6 (equally spaced)
Over 315 to 400 or less	d+25	15	d+12	M12	8 (equally spaced)
Over 400 to 500 or less					
Over 500 to 630 or less					
Over 630 to 800 or less	d+28	18			12 (equally spaced)
Over 800 to 1000 or less					
Over 1000 to 1250 or less	d+30	20	d+15	M16	16 (equally spaced)
Over 1250 to 1600 or less					
Over 1600 to 2000 or less					

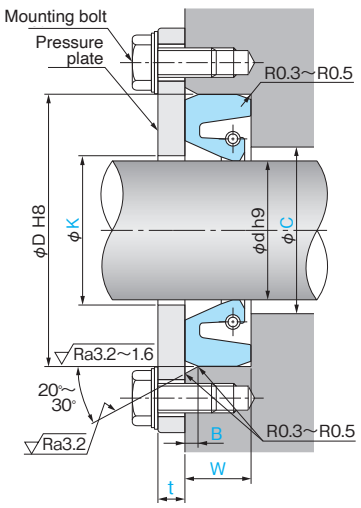

The notation of surface roughness on the catalog comply with JIS B 0601: 2001

OC Type Oil Seal

The sealing lip of an OC type oil seal comes into contact with the inner surface diameter of the housing bore. The machining methods for these inner diameter surfaces and the surface roughnesses are shown in Table 6-11.

Table 6-11 Housing and Shaft Design Specifications for **OC Type** Oil Seals

Classification / Item		Shaft design specifications	Housing (inner diameter surface) design specifications
Housing material		Carbon steels for machine structural use	
Surface hardness		30 HRC or more	
Surface roughnes		(3.2~1.6)μm Ra (12.5~6.3)μm Rz	(0.4~0.2)μm Ra (3.2~1.6)μm Rz
Method		Machining	Plunge ground Machining
Dimensional tolerances	400mm or less nominal outside diameter	JIS h8	JIS H9
	Over 400mm nominal outside diameter	JIS h7	

Shape and size of housing bore (inner diameter surface)

OC type

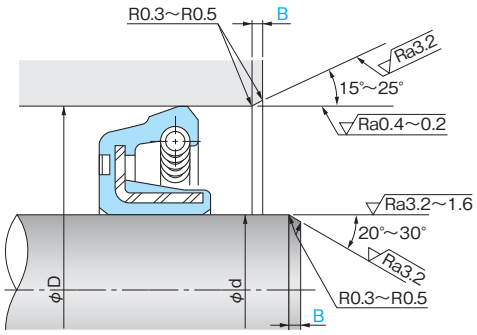

Units: mm

Nominal width of oil seal (b)	W_1	B	d_1
6 or less	b+0.5	1.0	d+10
Over 6 to 10 or less		1.5	
Over 10 to 14 or less		2.0	
Over 14 to 18 or less		2.5	
Over 18 to 30 or less	b+1.0	3.0	

The notation of surface roughness on the catalog comply with JIS B 0601: 2001

VR, ZF, and ZT Type Oil Seals

Design specifications for the shafts and housings of VR, ZF, and ZT type oil seals are shown in Table 6-12.

Table 6-12 Housing and Shaft Design Specifications for **VR, ZF** and **ZT Type** Oil Seals

Classification / Seal type / Item	Shaft design specifications		Housing (inner diameter surface) design specifications	
	VR	**ZF, ZT**	**VR***	**ZF, ZT**
Housing material	Carbon steels for machine structural use			
Surface hardness	30 HRC or more			No requirement
Surface roughnes	(3.2~1.6)μm Ra (12.5~6.3)μm Rz	(0.4~0.2)μm Ra (3.2~1.6)μm Rz	(1.6~0.2)μm Ra (6.3~0.8)μm Rz	(0.8~0.2)μm Ra (6.3~1.6)μm Rz
Method	Machining			

*The housing roughness specification for the VR type seal is only required where the seal lip contacts the housing axially.

Mating Face Design

VR type

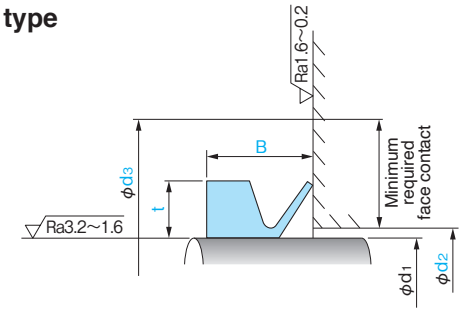

Units: mm

Recommended shaft diameter d_1	B	d_2	d_3	t
Less than 4	$2.5^{\pm0.3}$	d_1+ 1	d_1+ 4	1.5
4 or more to less than 10	$3.0^{\pm0.4}$		d_1+ 6	2.0
10 or more to less than 20	$4.5^{\pm0.6}$	d_1+ 2	d_1+ 9	3.0
20 or more to less than 40	$6.0^{\pm0.8}$	d_1+ 3	d_1+12	4.0
40 or more to less than 70	$7.0^{\pm1}$		d_1+15	5.0
70 or more to less than 110	$9.0^{\pm1.2}$	d_1+ 4	d_1+18	6.0
110 or more to less than 160	$10.5^{\pm1.5}$		d_1+21	7.0
160 or more to less than 200	$12.0^{\pm1.8}$	d_1+ 5	d_1+24	8.0
200 or more	$20.0^{\pm3.0}$	d_1+10	d_1+45	15.0

Housing Bore (inner surface diameter)

ZF type, ZT type

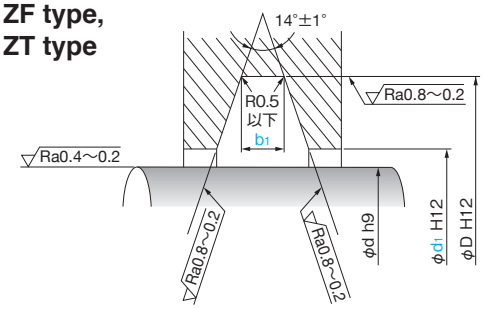

Units: mm

Shaft diameter d	d_1 (Standard)
20 or less	d+1.0
Over 20 to 60 or less	d+1.5
Over 60 to 110 or less	d+2.0
Over 110	d+3.0

For more details, please refer to the formal dimensions.

Units: mm

Groove widt b_1	Dimensional tolerances
3 or less	+0.14 0
Over 3 to 6 or less	+0.18 0
Over 6 to 10 or less	+0.22 0
Over 10 to 18 or less	+0.27 0

Note: Catalogues of models ZF and ZT type were discontinued at the end of September 2024.
Details of product specifications and handling are provided in the same manner as for other general oil seal catalogs.

The notation of surface roughness on the catalog comply with JIS B 0601: 2001

7. OIL SEAL STORAGE PRECAUTIONS, STORAGE TIME AND HANDLING GUIDE

Even if you design or select the shaft or housing to install the oil seal correctly, the oil seal may not function as intended if it is roughly handled or assembled.
This chapter describes proper handling of oil seals during assembly and replacement. Read and follow the instruction manual carefully before using the oil seal.

(1) Handling Standard Oil Seal

Use the following instructions for proper seal handling:

a. Packaging

Oil seals are packaged in bags, rust-preventing paper, or corrugated cardboard boxes, depending on the size or quantity. The packaging is necessary to protect the oil seal against rust, damage, and foreign matter. Only open the package just before use.

b. Storage Precautions and Storage Time

(a) Storage Precautions

Follow these instructions when storing oil seals.

❶ Do not open the package until needed, as the oil seals may become contaminated or damaged.

❷ Do not expose the oil seal to direct sunlight for extended periods of time. Ultraviolet rays may hasten the deterioration of rubber.

❸ Do not place the oil seal in locations where it may be exposed to excessive moisture. Rust can form on the external metal or garter spring of the oil seal.

❹ Do not place the oil seal near heat sources, such as a boiler or stove. Heat accelerates the deterioration of rubber.

❺ Avoid hanging the oil seal on nails or steel wires, or dangling the oil seal using a cord. The oil seal may be deformed, or its sealing edge may be damaged.

❻ When storing the oil seal after opening its package, take care to protect it from rust, as well as foreign particles such as dust and sand.

❼ Avoid excessive shock during handling or transit to prevent deformation of the oil seal or dislodging the garter spring.

(b) Storage Time

The table below shows the maximum shelf life of properly stored oil seals.

Product	Material	Shelf Life
100% Rubber Products	Nitrile rubber (NBR)	10 years
	Acrylic rubber (ACM)	20 years
	Silicone rubber (VMQ)	20 years
	Fluorocarbon rubber (FKM)	20 years
Rubber/Metal Bonded Products	Nitrile rubber (NBR)	10 years
	Acrylic rubber (ACM)	10 years
	Silicone rubber (VMQ)	10 years
	Fluorocarbon rubber (FKM)	10 years

- The storage periods shown above are applicable to products sealed in standard packaging and stored in a cool dry place away from direct sunlight.
- The indicated storage periods do not account for rust formation on the metal parts of bonded seal products, since rust is largely influenced by the storage environment.
- Before using an oil seal that has been kept in storage for an extended period of time, check that it is free from rust.
- A white powder may appear on the surface of rubber products (known as “bloom phenomenon”). This does not affect oil seal performance.

c. Protect the Shaft and Housing

Do not damege the shaft or housing before assembly as this may cause leakage. Use a carrying jig to prevent the finished surfaces of the shaft and housing from contacting other objects, as indicated below.
Fig. 7-1 shows a storage jig for housings. Each housing is placed so that it leans against individual partitions to prevent damage. This jig is made from plastic to prevent the metal part from being scratched.

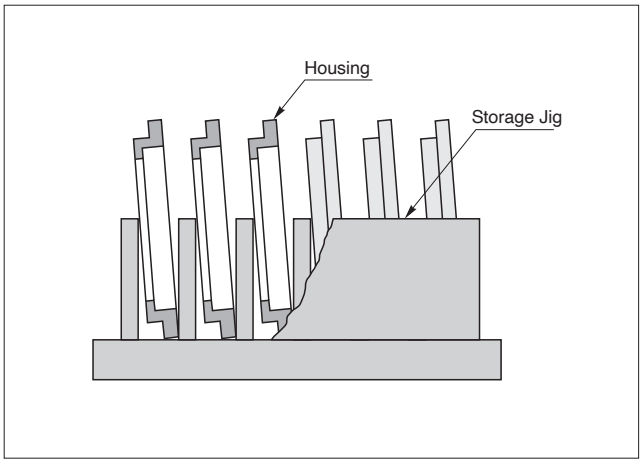

Fig. 7-1 Housing Storage Jig

Fig. 7-2 shows a storage/transport cap jig for shafts. Placing this plastic cap over the shaft prevents the shaft from being damaged.

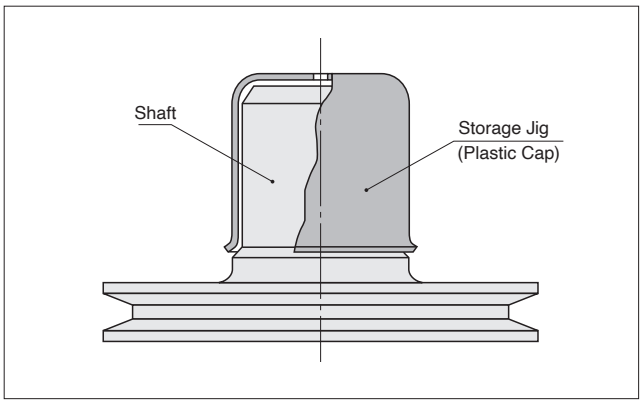

Fig. 7-2 Shaft Storage Jig

d. Preparation Before Assembly

(a) Oil seal

❶ Do not use an oil seal that has dust or sand on it, as leakage may occur.

❷ Do not scrape the sealing edge of the oil seal with nails or other hard objects. The sealing edge is the most important part in determining oil seal performance.

❸ For an oil seal having two or more lips, such as the T type and K type oil seals, apply grease* between the lips to lubricate the lips.

❹ For an oil seal having only one lip, such as the S type, V type, and TCK type oil seals, coat the seal lip edge with grease* to lubricate the lip.

*Please refer to Fig. 7-3 for grease filling methods.
*For recommended greases, refer to page 87.

(b) Shaft and Housing

❶ Check that the shaft surface and the housing bore are free of rust preventatives, dust and grit. If these impurities exist, clean thoroughly to remove. If oil or gasoline is used for cleaning, carefully wipe the area dry. Also, spraying compressed air is effective, as it cleans areas that are not readily visible. Residual oil or gasoline on the shaft or the housing bore can result in the oil seal swelling to an incorrect size, which may cause leaks.

❷ Check that the inner surface of the housing bore and the chamfered area, as well as the shaft end and the shaft surface into which oil seal is inserted are free of defects and burrs. Remove any irregularities with emery paper to prevent damage to the sealing edge or outer surface during assembly.

❸ Check that the shaft surface that the sealing edge will contact is free of defects and rust, thus preventing leaks from those causes.

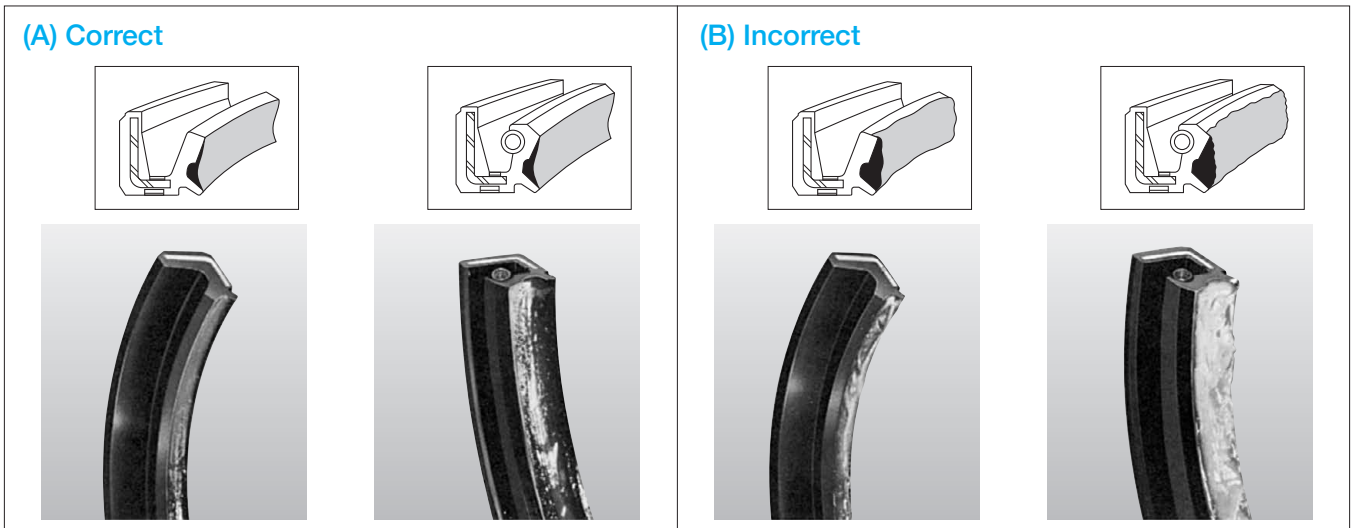

Apply the grease so that it does not overflow past the lip, as shown in (A).

Applying too much grease, as shown in (B), may cause overflow during assembly that may be mistaken for leakage.

Fig. 7-3 How to Apply Grease

e. Installing the Seal Into the Housing Bore

(a) Installing the Seal

❶ Orient the seal so that the seal lip faces the fluid to be sealed, as shown in Fig. 7-4.

❷ Install the seal squarely using the jig as illustrated in Fig. 7-5.

Fig. 7-6 shows improper installation jig use. The oil seal will be deformed by the jig pressure and resistance of the seal/bore press-fit. When installing the oil seal, there is no need to apply force at the area near the lips.

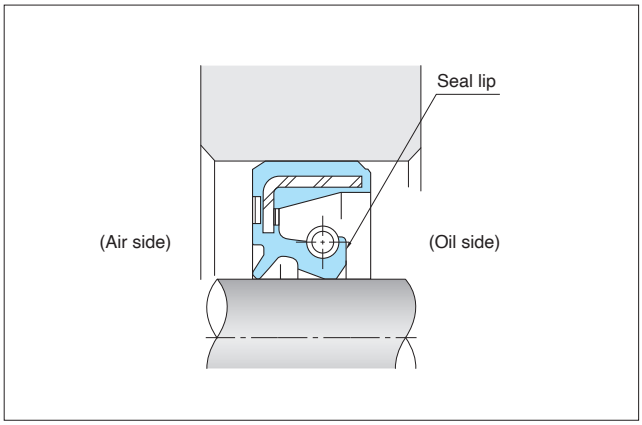

Fig. 7-4 Orientation of the Seal

Example of Assembly jig (Correct and Incorrect)

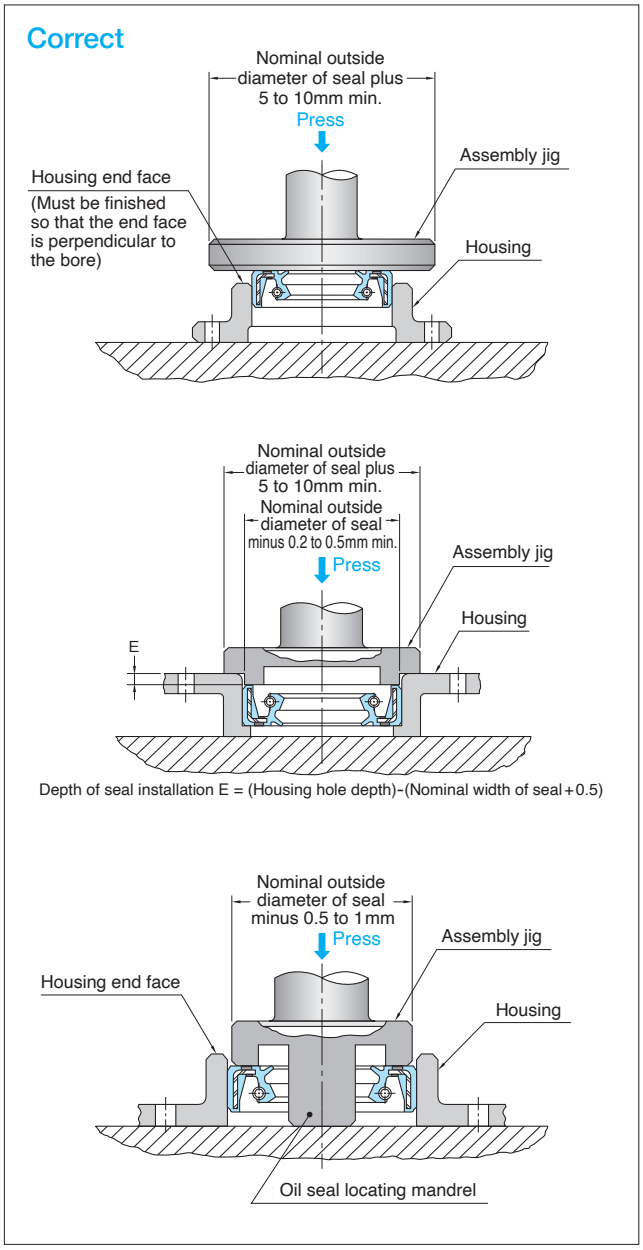

Fig. 7-5 Use Examples of Assembling Jig (applicable to the fit with rubber or metal)

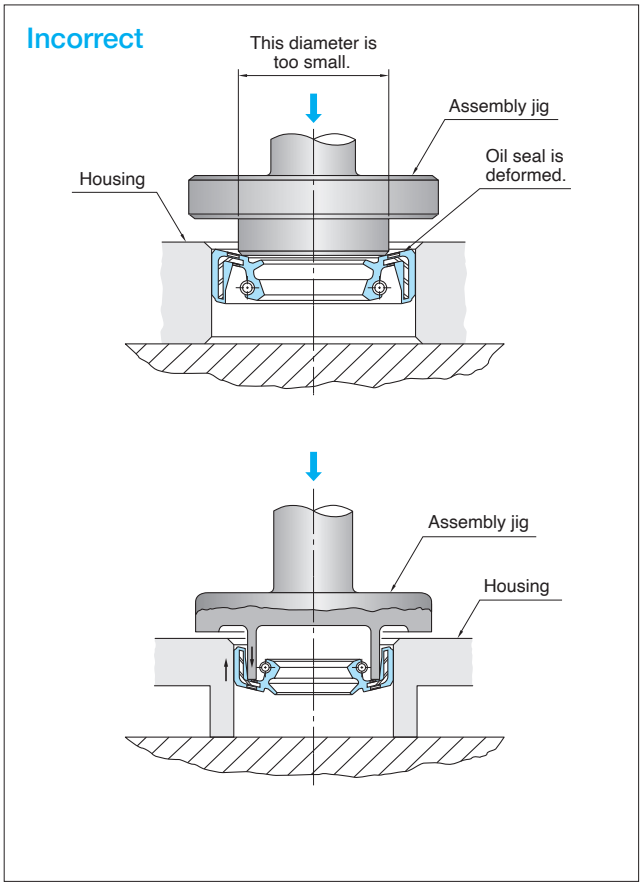

Fig. 7-6 Examples of Improperly Designed Assembly Jigs

❸ Place the oil seal in the housing bore in a horizontal position, and then press the oil seal in uniformly. Pressing a cocked seal in with excessive force (see Fig. 7-7) deforms the oil seal, which in turn causes leakage.

❹ For oil seals with a rubber OD, press the assembly jig twice in succession to let the oil seal settle firmly at the desired depth of installation in the bore.

❺ If a press is not available, use a full-sized strike plate as shown in Fig. 7-8, and drive the entire circumference evenly with a hammer to install the oil seal squarely into the bore. Do not strike the oil seal directly with a hammer, as shown in Fig. 7-9.

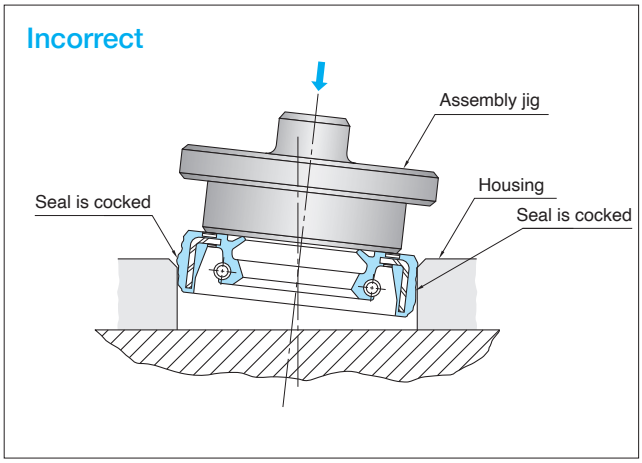

Fig. 7-7 A Cocked Seal Installation Example

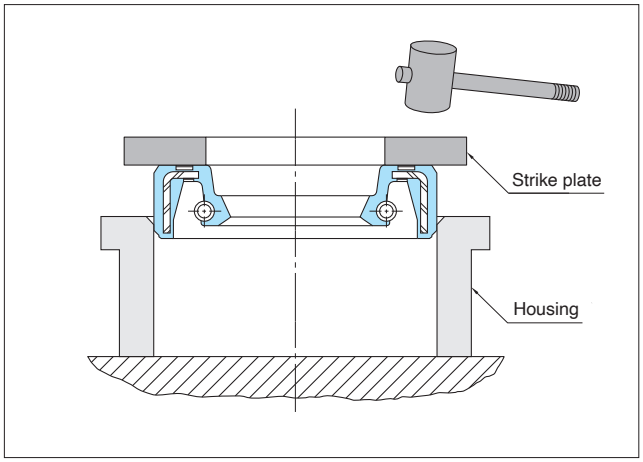

Fig. 7-8 Installing a Seal Without a Press

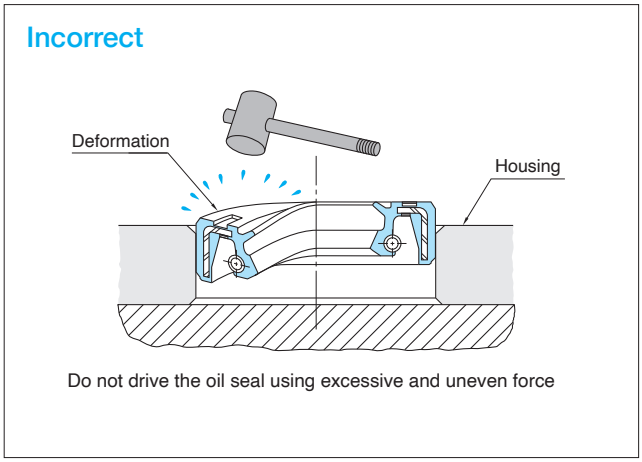

Fig. 7-9 Damage Caused by Direct Hammer Strikes

❻ Fig. 7-10 shows the press forces required to properly in stall an oil seal.

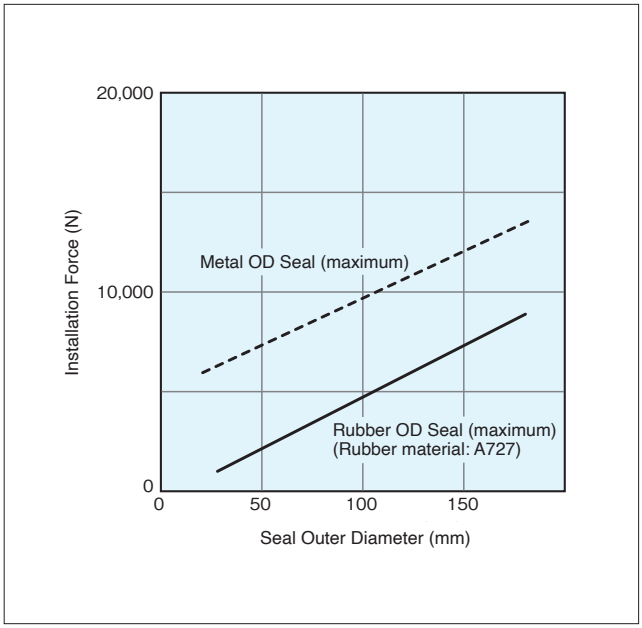

Fig. 7-10 Seal Installation Force Requirements (Base on 100mm/min)

(b) Assembly Into a Split-Type Housing

As mentioned on page 37, avoid using a split-type housing if possible. If a split housing must be used, first assemble the housing, then install the seal in order to prevent cocking the seal.

Leaks can occur at the mating surface areas of the split housing. Apply a coat of liquid gasket sealant to the split area to prevent this leakage.

(c) Liquid Gasket Sealant

When a metal OD seal is used, it is necessary to apply a coat of liquid sealant to prevent the bore ID surface from developing flaws during oil seal replacement, or when a metal OD seal is used and the application is subjected to internal pressure. Observe the following precautions when using sealants.

❶ Apply a thin coating of the sealant to the bore ID surface of the housing, and wipe off any excess. Leakage can occur if the lip or the shaft surface is contaminated with sealant.

❷ Full-curing or extremely strong sealants require excessive force to remove the oil seal, usually resulting in damage to the housing. Always use semi-drying liquid gasket sealant.

f. Installing the Seal Onto the Shaft

❶ Apply a thin coating of lubricant or mineral oil based lithium grease (for example, Sealube SI made by NOK) to the shaft surface and the chamfer area. The seal should be smoothly inserted onto the shaft. Take care not to cause lip turn-under during this operation.

❷ Align the center the of the seal with the shaft centerline, and carefully insert the shaft into the oil seal.

❸ When installing a pre-assembled housing and seal onto a shaft, or inserting a long shaft into a preassembled seal/housing, the seal lip can be damaged due to shaft contact during this awkward operation. See sketch (A) in Fig. 7-11 and 7-12. Avoid this damage by installing the seal only after the shaft and housing are assembled. If this is impossible, use an installation guide for the housing or shaft, as illustrated by (B) in Fig. 7-11 and 7-12.

❹ If the shaft has key ways or splines, the seal's lip edge may be damaged. Cover the shaft as illustrated in Fig. 7-13.

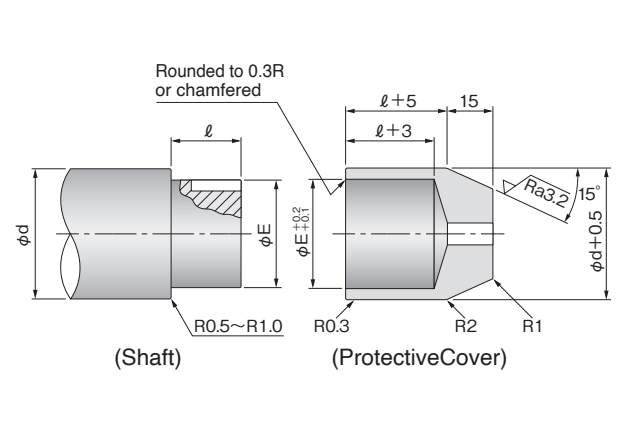

Fig. 7-13 Protective Key way/Spline Cover

The notation of surface roughness on the catalog comply with JIS B 0601: 2001

g. Oil Seal Replacement

❶ Always replace used oil seals when disassembling the oil seal area (i.e., removing the shaft).

❷ When removing an oil seal, take care not to damage the housing bore surface.

❸ When replacing a new oil seal, place a 2mm shim in the housing hole in order to prevent the seal lip from riding in the same spot on the shaft as the previous seal. (It is assumed that the shaft will continue to be used.)

h. Cleaning and Painting

❶ Cleaning the machine with oil or gasoline may cause the lip material of an exterior seal to swell, resulting in reduced seal performance.

❷ When painting the machine with an exterior seal, use care not to get paint on the oil seal or the shaft surface.

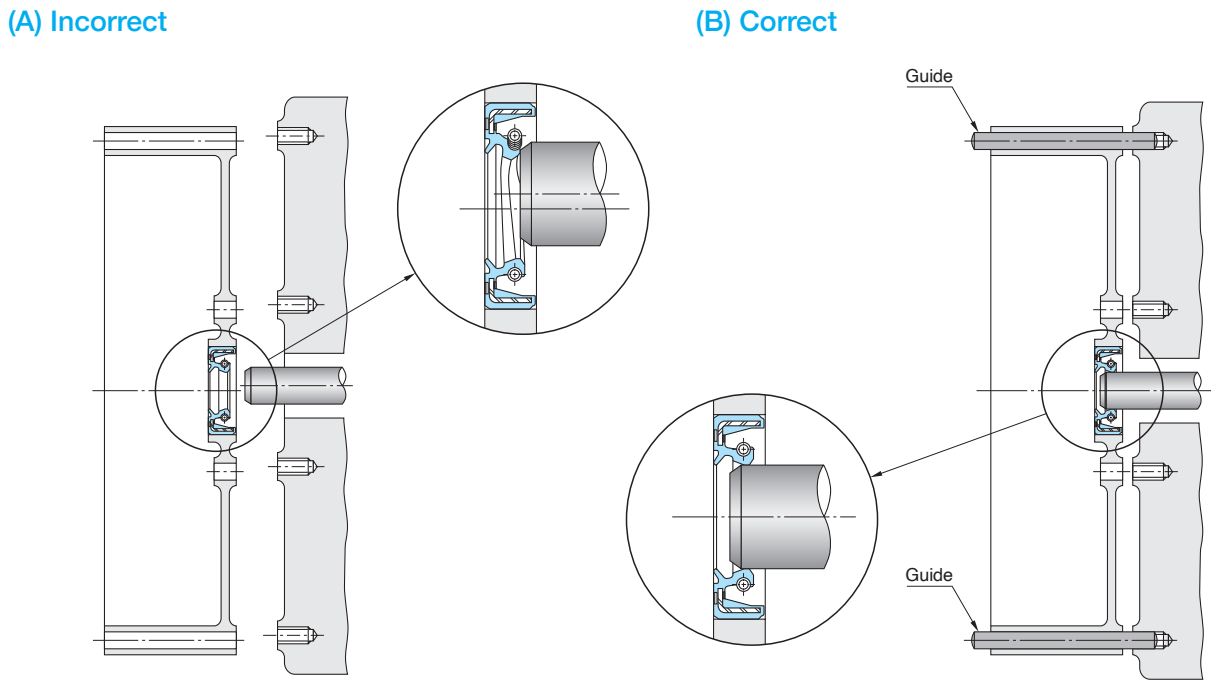

Note: When assembling a heavy housing by hand, as illustrated in (A), the shaft may come into contact with the lip and deform it, due to the difficulty of aligning the shaft and oil seal. For this reason, use a guide by taking advantage of the mounting bolt holes, as illustrated in (B).

Fig. 7-11 Assembling a Heavy or Awkward Housing

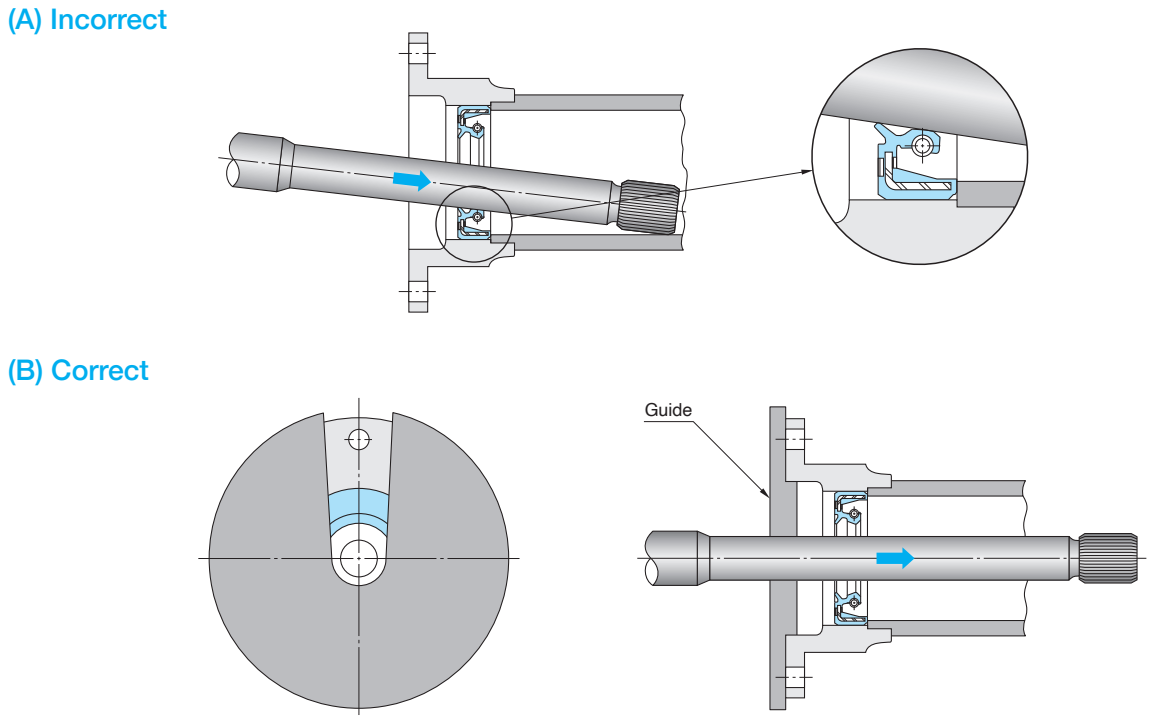

Note: If a guide is not used, part of the lip rubs against the shaft, damaging the sealing edge, as illustrated in (A).
The use of the guide allows you to insert the shaft accurately, as illustrated in (B). Select a plastic guide to prevent the shaft surface from being scraped.

Fig. 7-12 Assembling a Long or Awkward Shaft

(2) Handling of General Oil Seals

The following explains how to handle general oil seals.

OC Type Oil Seal

The seal lip and press-fit area of OC type seals are “inside out” (reversed) relative to those of standard oil seals. Nevertheless, handle this seal in the same manner as standard oil seals.

The lip is located on the outer circumference. Protect the outer peripheral lip during transit or storage.

TCJ, SA1J, VAJ, and KA3J Type (PTFE) Oil Seals

The sealing edge of TCJ, SA1J, VAJ, and KA3J Type seals is more susceptible to installation damage than seals with standard synthetic rubber lips. Observe the following precautions when mounting onto the shaft.

❶ Check that the shaft end is free of burrs or other defects.

❷ Use an installation jig when there are key ways or splines on the shaft. (Refer to Fig. 7-13 on page 48.)

❸ Insert the shaft in the direction indicated in Fig. 7-14.

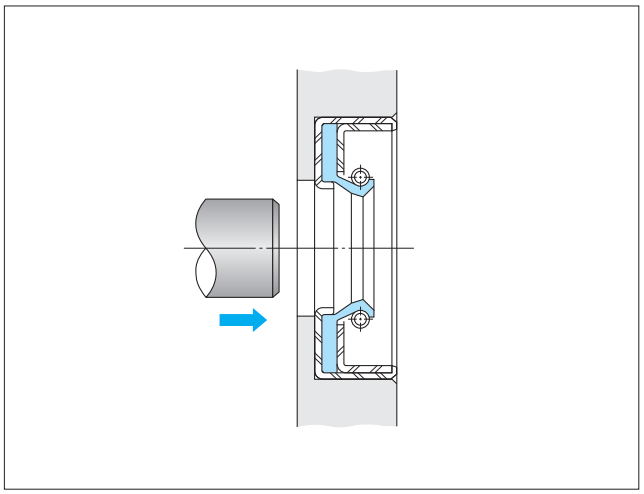

Fig. 7-14 Shaft Assembly Direction

QLFY Type (With Integral Shaft) Oil Seal

The QLFY type seal has an integrated shaft (known as a unitized design). Mount this oil seal as a one-piece structure.

❶ Use a jig as illustrated in Fig. 7-15 to press the QLFY seal into the housing bore.

❷ Insert the shaft.

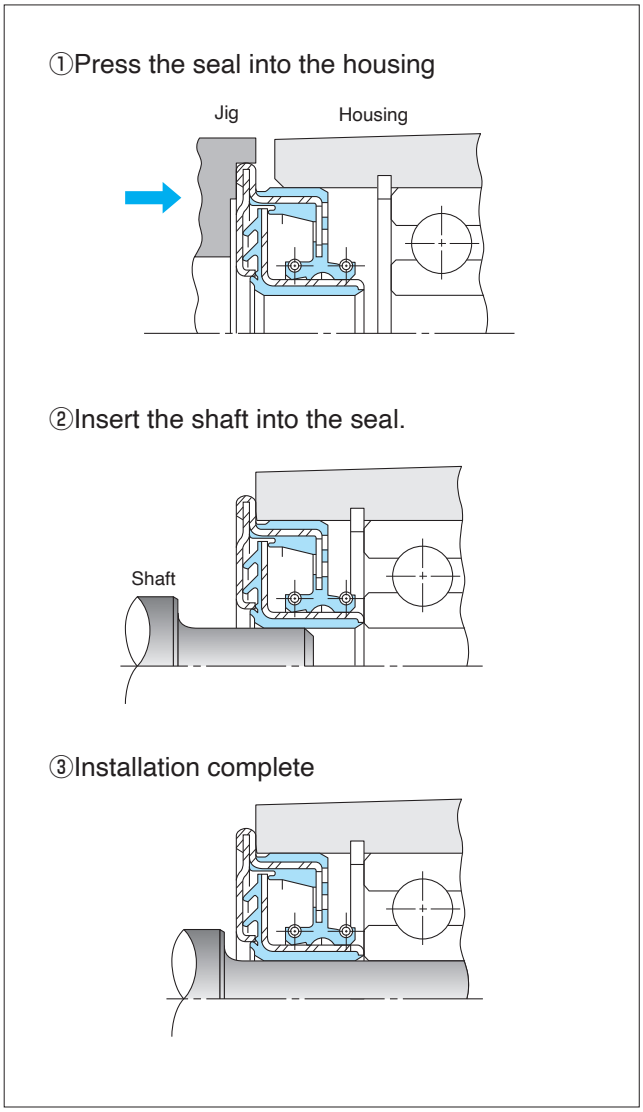

Fig. 7-15 Mounting a QLFY Type Seal

VR Type (End Face) Seal

Mount the VR type seal so that the fluid to be sealed is outside the lip perimeter, as illustrated in Fig. 7-16. Apply a thin coating of grease to the sliding face of the lip before mounting. It is not necessary to put grease on the inner fixed face.

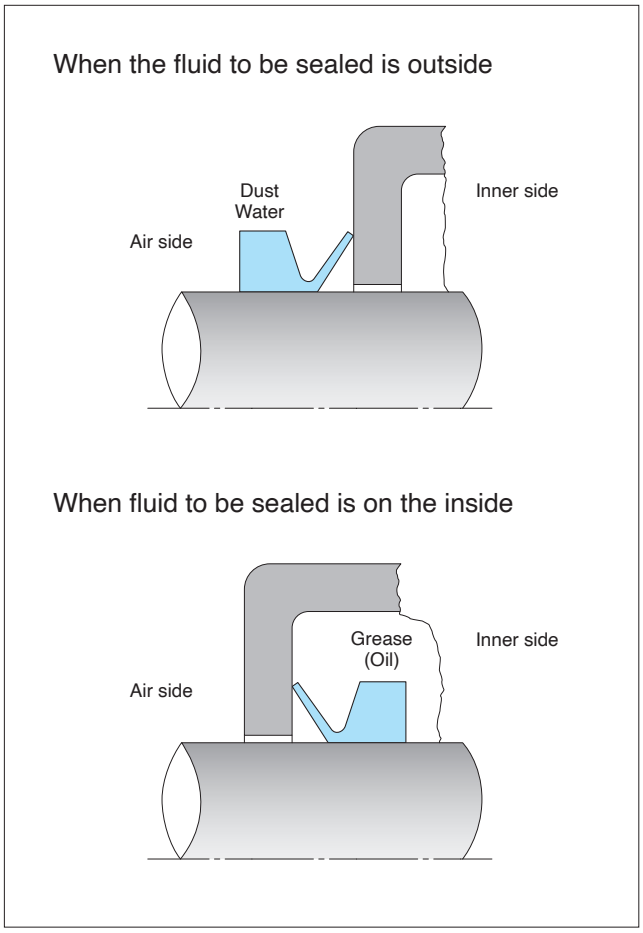

Fig. 7-16 Proper Orientation of VR Type (End Face) Seals

ZF and ZT Type Oil Seals

Mount the ZF and ZT type seals into the grooves so that the perimeter of the oil seal is seated as evenly as possible.

Do not apply a coating of grease or oil to the trapezoidal grooves of the housing or the OD of the oil seal.

After the oil seal is mounted in the housing grooves, apply a light coat of grease to the seal lip, and then assemble the structure onto the shaft.

Note: Catalogues of models ZF and ZT type were discontinued at the end of September 2024.
Details of product specifications and handling are provided in the same manner as for other general oil seal catalogs.

SBB, Large-diameter SB, and Large-diameter TB type Oil Seals

❶ Assembly Into the Housing

Insert the entire circumference of the oil seal evenly by using a jig, as illustrated in Fig. 7-17.

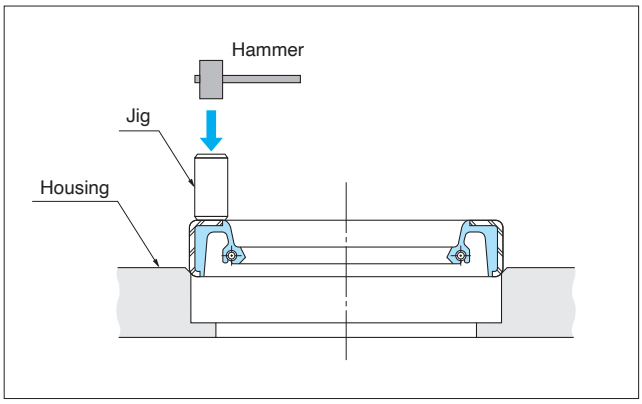

Fig. 7-17 Seal Installation

❷ Installing the Shaft

Apply a coat of oil or grease to the shaft surface to facilitate shaft installation and for initial lubrication. Use a jig as illustrated in Fig. 7-18 when there are key ways or splines on the shaft, or when the shaft end cannot be chamfered properly.

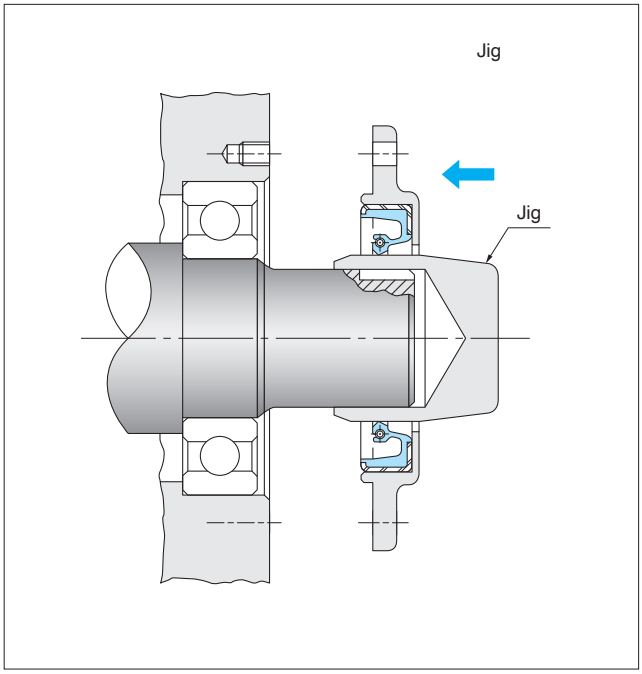

Fig. 7-18 Shaft Installation

Installing an MG Type Oil Seal

An MG type oil seal (Fig. 7-19) is installed after it is cut through its OD, giving it flexibility to be used where a full-round seal cannot. Cut the oil seal as illustrated in Fig. 7-20. Connect the hooks of the garter spring, then put the garter spring in the lip pocket.

Observe the following precautions when assembling an MG type oil seal.

❶ Place the cut splice side of the oil seal at the top.

❷ Rotate the garter spring hook 45 degrees from the splice cut.

❸ Adjust the spliced ends as evenly as possible. Do not apply any liquid sealant to the splice joint.

❹ Place the pressure plate and tighten the bolts evenly. If the pressure plate is a split-type design, stagger the split lines 90 degrees to the seal splice.

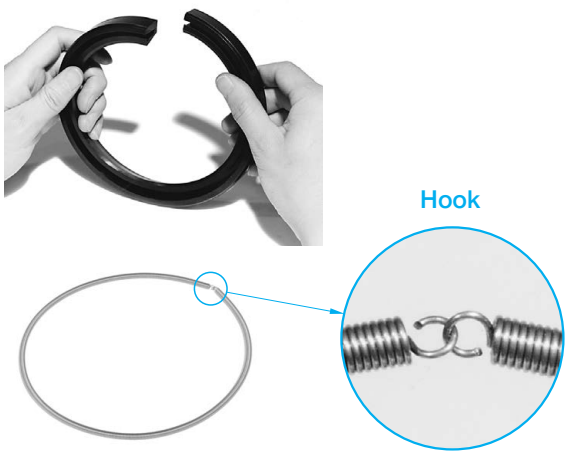

Fig. 7-19 MG Type Oil Seal

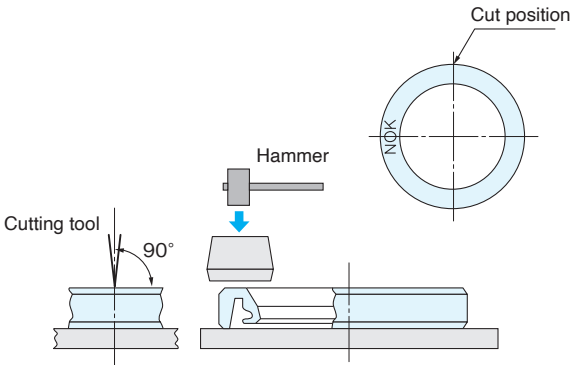

Cutting

❶ Use a double-beveled tool without nicks.
❷ Remove the garter spring before cutting.
❸ Cut the oil seal at a right angle.

*If you have any questions on cutting methods, please inquire further with NOK.

Fig. 7-20 Cutting the MG Seal

8. SEAL LEAKAGE TROUBLESHOOTING GUIDE

(1) Causes of Seal Leaks

If oil leakage is discovered, first determine the point of origin oft he leak. The leaks may not have originated from the oil seal, and residual oil or grease on the seal itself can also be mistaken for a leak.
Seal leaks are divided into two groups: leaks from the sealing lip and leaks from the press-fit area of the housing, as illustrated in Fig. 8-1. Typical causes of each group of leaks are shown in factorial diagrams (Figs. 8-2 and 8-3). Examples of improper diagnosis is discussed explained below.

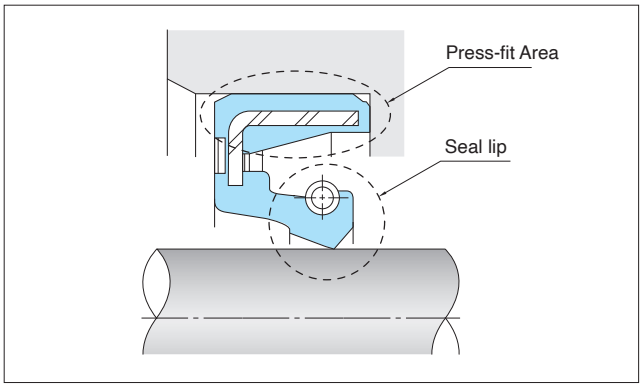

Fig. 8-1 The Two Points of Origin of Seal Leakage

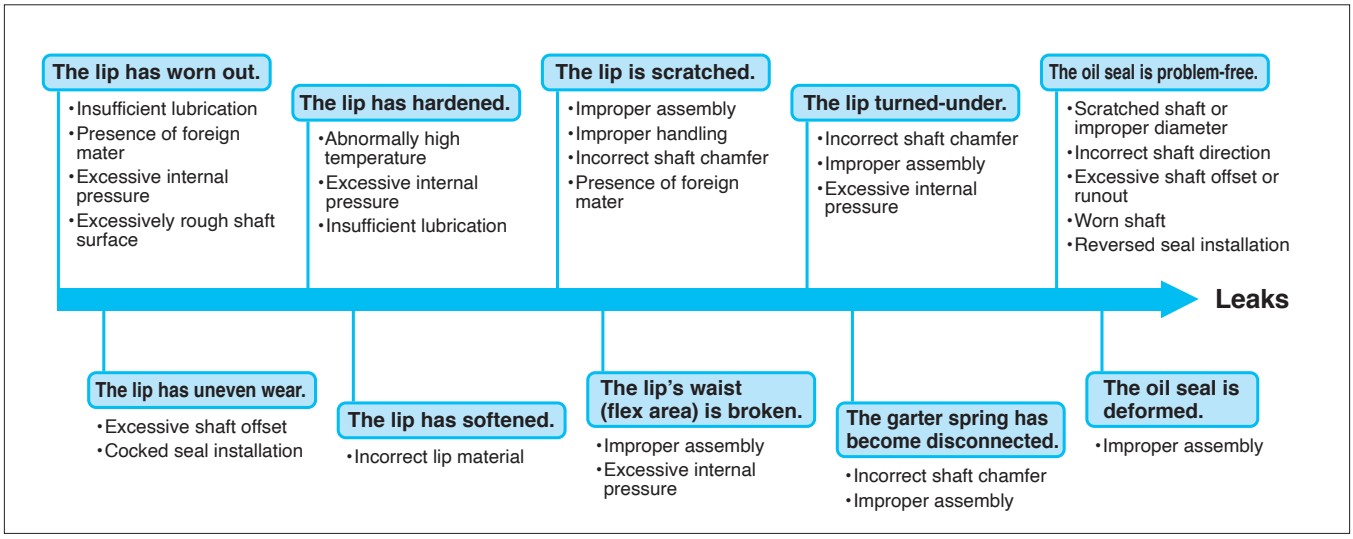

Fig. 8-2 Lip Leakage Diagnosis

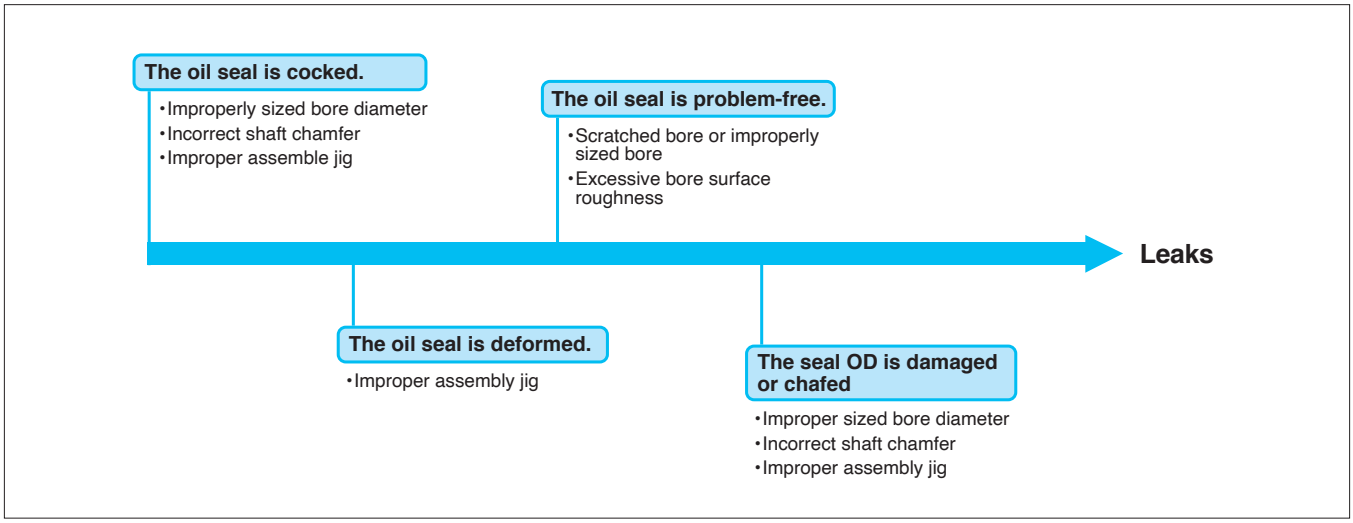

Fig. 8-3 Press-Fit Area (OD) Leakage Diagnosis

Examples of Leak Misdiagnosis

❶ Leaks from the mating surfaces of the machine
- The gasket is deformed
- The mounting bolts are loose
- There are defects in the mating parts (i.e., indentations, burrs)

❷ Leaks caused by scratches or porosity in the housing, or other machine covers

❸ Residual oil or grease from assembly on the air side of the oil seal

❹ Extrusion of pre-lube grease or oil from intial assembly

Table 8-1-1 Leakage from the Seal Lip

Factor		Failure mode	Cause	Solution
Excessive lip wear	Insufficient lubrication	The lip edge is severely worn, and the worn surface is dull and rough. 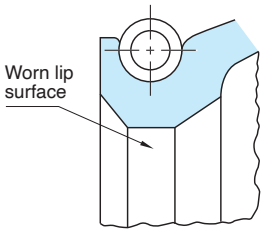 	• Abnormally high wear has occurred from the friction of insufficient lubricition. The amount of lubricant was below the specified level, and therefore did not reach the sealing lip.	• Add lubricant up to the specified level and operate.
			• The machine design did not allow adequate oil flow to the seal lip. Examples: • There is a slinger in front of the sealing lip. • There is a drain in front of the sealing lip. • If a spray/mist lubrication method is used, the lube did not reach the seal until several minutes after start-up.	• As a quick solution, change to a double-lip seal model, and apply grease between the lips. • As a permanent solution, change the structure near the oil seal to allow lubricant to freely flow to the seal lip area.
	Foreign matter	The lip edge is severely worn, and there are grooves or indentations the worn surface. 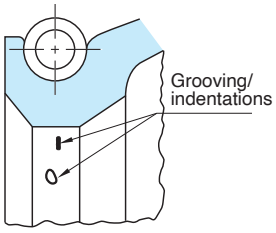 	• Since a shaft or seal contaminated with cutting chips was used, the contaminants were embedded in the sealing lip. 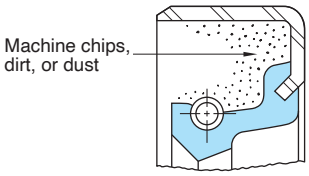 • Since the oil seal was assembled in the presence of dirt or dust, the contaminants became embedded in the sealing lip. • Since the seal or housing was assembled with liquid gasket sealant, the sealant contaminated the shaft or seal. • Since a seal or shaft with paint stains was used, the paint contaminated the shaft/seal.	• During assembly, use particular care to ensure that the oil seal or shaft is not contaminated with dirt or sand. • Clean the machine with the same lubricant sealed in the machine.
	Excessive internal pressure	The lip edge is severely worn, and the wear band is concave. 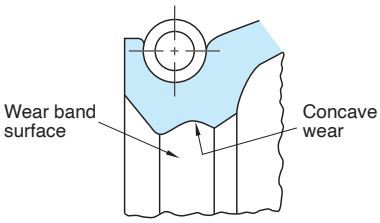 	• Pressure at the oil seal area exceeded the design pressure.	• Change to a high-pressure type oil seal. • Provide a vent breather to maintain proper pressure.
	Excessive shaft surface roughness	The lip edge is severely worn, and there are circumferential grooves on the wear band.	• The seal lip has severe wear since the shaft finish was rougher than the specified range of 0.8 to 2.5 μm Rz.	• Smooth the shaft surface to 0.8 to 2.5 μm Rz with emery paper (#240 or similar). Do not oscillate the emery paper axially along the shaft. • Replace the shaft with one having the specified finish roughness.

The notation of surface roughness on the catalog comply with JIS B 0601: 2001

Table 8-1-2 Leakage from the Seal Lip

Factor		Failure mode	Cause	Solution
Eccentric lip wear	Large shaft-to-bore offset	The lip wear band width is uneven around the circumference, and the minimum and maximum wear locations correspond well on the main lip and the secondary lip. 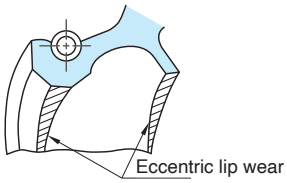	• Machine has high shaft-to-bore misalignment.	• Improve the concentricity of the shaft and housing.
			• Shaft has high dynamic runout.	• Improve the shaft runout.
	Cocked seal installation	The lip wear band is uneven around the circumference, and the minimum and the maximum wear locations of the main and secondary lips are inversely related. 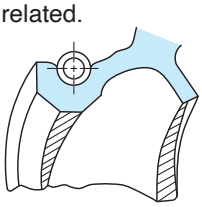	• The oil seal was installed cocked because the housing bore diameter is too small.	• Use a housing within the design dimensions.
			• The oil seal was installed cocked due to an unchamfered or incorrectly chamfered housing.	• Corrrectly chamfer the housing. (Refer to page 30. “6. HOUSING AND SHAFT DESIGN GUIDE”)
			• The oil seal was installed cocked because the assembly jig was cocked.	• Improve the assembly jig. (Refer to pages 44 through 52. “7. OIL SEAL STORAGE PRECAUTIONS, STORAGE TIME AND HANDLING GUIDE”)
Lip hardening	Abnormally high temperature	The lip wear band is smooth and glossy. The entire sealing lip is hardened and there are cracks. 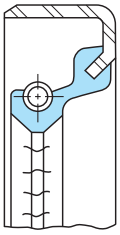	• The oil temperature near the sealing lip exceeded the heat-resistance limits of the rubber.	• Investigate the cause and take appropriate measures to prevent future temperature rises.
			• The oil temperature exceeded the design temperature limits due to changes in the application conditions.	• Replace with a seal with a beter heat-resistant lip material. **Example**: Change from nitrile rubber (NBR) to acrylic rubber (ACM). Change from acrylic rubber (ACM) to fluorocarbon rubber (FKM). Note that a change of lip material also changes the oil resistance.
	Excessive internal pressur	The lip wear band is wide and glossy. There are cracks on the sliding lip.	• The application pressure exceeded the limtis of the oil seal.	• Change to a high-pressure type oil seal. • Provide a vent to relieve pressure.
	Insufficient lubrication	The lip wear band is smooth and glossy, and there are cracks on the lip sliding surface. Hardening usually occurs only on the wear surface.	• A dry-wear condition occurred because the machine had an insufficient lubricant level.	• Add lubricant up to the specified level and operate.
			• A dry-wear condition occurred because the machine's mist-type oil supply is inadequate.	• As a quick solution, change to a double-lip seal model, and apply grease between the lips. • As ap ermanentso lution, change the structure near the oilse al to allow oilto f low freelyu pto t he seal lip.
Lips softening	Inappropriate lip material	The seal lip is swollen and soft.	• The seal lip has become swollen because the wrong lip material was selected.	• Change to an oil seal featuring a lip material that does not swell up in the presence of the lubricant used.
			• The seal lip swelled because it was soaked in solvents or gasoline, or was not wiped off after washing.	• Do not wash the oil seal in solvents.

Table 8-1-3 Leakage from the Seal Lip

Factor		Failure mode	Cause	Solution
Scratches on the lip	Improper assembly	There are visible scratches on the sealing edge.	• The seal lip was scratched through contact with shaft a keyways or splines.	• Cap the keyways or splines to prevent scratching.
			• The seal lip was scratched because it was assembled over burrs or other defects in the shaft chamfer.	• Remove burrs and defects.
	Improper handling		• The seal lip was scratched because the lip came into contact with sharp metal parts during transit or storage.	• Improve the transit/storage method.
			• The seal lip was scratched because the oil seal was handled with gloves contaminated with machine cutting chips.	• Avoid touching the seal lip edge.
	Improper shaft chamfer	There are visible scratches on the sealing edge.	• The lip was caught at the shaft end and scratched because the shaft was incorrectly chamfered.	• Chamfer the shaft correctly. (Refer to page 30. “6. HOUSING AND SHAFT DESIGN GUIDE”)
	Contamination on the seal	• There is contamination on the seal lip edge. • There are indentations on the lip sliding area.	• A shaft contaminated with cutting chips was used, and the chips became lodged in the lip. • Since parts contaminated with metal shavings were used, the shavings became lodged in the lip edge. • Since a dusty or dirty shaft or oil seal was used, foreign matter caught in the lip edge.	•Wash the machine parts thoroughly prior to assembly.
Lip turn-under	Improper shaft chamfer	Part ofth e lip isf olded under and pinched to the shaft.	• The lip was caught on the shaft end and folded under due to a poor shaft chamfer.	• Chamfer the shaft to the correct size, and apply grease to the chamfered area before assembly.
	Improper assembly		• The lip folded under due to improper shaft and housing assembly.	• Assemble the unit carefully by aligning the shaft and housing bore. Apply grease to the shaft end.
	Excessive internal pressure	Part or all ofth e lip folded under. 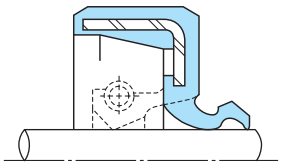	• Abnormally high pressure occurred during operation, blowing out the lip.	• Change to a pressure-free structure. • Use pressure-resistant oil seals.
Broken waist (flex section) of the lip	Improper assembly	There are cracks on the hinge flex area ofth e lip. 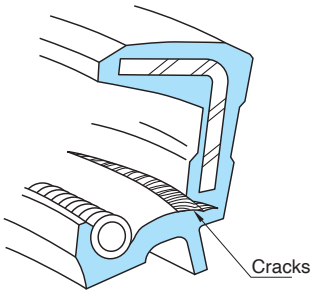	• The lip hinge flex section cracked because the lip was squeezed out of shape during assembly.	• Assemble the unit carefully by aligning the shaft and housing bore.
	Excessive internal pressure		• The lip hinge flex section cracked due to excessive pressure during a post-assembly pressure test (air-leak test).	• Avoid tesitng at a pressures higher than the design limits of the seal.
			• The lip hinge flex section cracked due to pressures exceeding the design limits.	• Change to a structure that does not produce excessive pressure. • Change to a pressure-resistant oil seal.

Table 8-1-4 Leakage from the Seal Lip

Factor		Failure mode	Cause	Solution
Garter spring disconnected	Improper shaft chamfer	Garter spring disconnected.	• The lip caught on an improperly chamfered shaft end, and popped the garter spring.	• Properly chamfer the shaft and apply grease tot he chamfered area before assembly.
	Improper assembly		• The garter spring was disconnected because of improper shaft and housing assembly.	• Assemble the unit carefully by aligning the shaft and housing bore. Apply grease to the shaft chamfer.
Oil seal deformation	Improper assembly	Seal is damaged causing lip deformation. 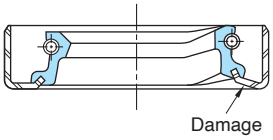	• The oil seal was deformed due to an inappropriate assembly jig.	• Improve the assembly jig.
The oil seal is problem-free.	Scratches or porosity on shaft	—	• There were visible scratches or porosity in the shaft's contact area.	• Place a shim behind the oil seal to displace the lip contact area to a virgin shaft finish location. • Remove scratches or porosity and refinish.
	Shaft has machine lead on its surface	—	• Shaft was finished by lathe cutting only.	• Smooth out the shaft sliding area using emery paper (#240 or similar) without axial movement.
			• The grinder or emery paper moved axially during the finish operation.	• Change the machining method (finish without axial feed, plunge direction only).
	Shaft eccentricity	—	• A worn bearing allowed shaft runout to exceed the design limits.	• Change the bearing.
			• A general-purpose oil seal was used for a structurally large shaft runout.	• Change to an oil seal that resists eccentricity.
	Shaft wear	—	• The oil seal was installed with dirt or metal shaving contamination. • The lubricant was degraded or contaminated with dirt or other foreign mater. • Contaminants entered into the lip contact area.	• Wash the machine components thoroughly, then place a shim behind the oil seal to displace the lip contact to a new area on the shaft. • For as mall amount of dust, change to an oil seal with a dust lip or dust cover.
			• A non-ferrous metal shaft was used.	• Use an appropriate shaft material and hardness.
	Reversed installation orientation	—	• The oil seal was installed incorrectly during assembly.	• Insert the oil seal with its seal lip directed towards the fluid side.

Table 8-2 Leakage from the Press-Fit Area (Seal OD)

Factor	Failure mode	Cause	Solution
Cocked seal installation	Before removing the oil seal: • The oil seal is cocked with respect to the housing and shaft. After oil seal is removed: • Contact at the press-fit is not even.	• The oil seal was cocked because the housing bore diameter was undersized.	• Finish the housing bore to the proper ID.
		• The oil seal was cocked due to an unchamfered or improperly chamfered housing.	• Chamfer the housing bore. (Refer to page 30. “6. HOUSING AND SHAFT DESIGN GUIDE”)
		• The oil seal was cocked because the assembly jig was cocked.	• Improve the assembly jig. (Refer to pages 44 through 52. “7. OIL SEAL STORAGE PRECAUTIONS, STORAGE TIME AND HANDLING GUIDE”)
Seal deformation	• The fit trace is disconnected locally. 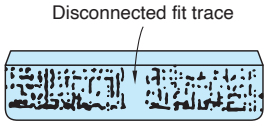 	• The oil seal was deformed because of an improperly designed assembly jig.	• Improve the assembly jig. (Refer to pages 44 through 52. “7. OIL SEAL STORAGE PRECAUTIONS, STORAGE TIME AND HANDLING GUIDE”)
		• A gap in the press-fit occured due to seal deformation from rough handling.	• Handle the seal carefully.
Scrapes or gouges on the OD	After the oil seal is removed: • There are longitudinal scratches on the oil seal press-fit. The rubber was gouged.	• The oil seal was cocked because the housing bore diameter was undersized.	• Finish the housing bore to the proper ID.
		• Scratching occurred at the OD of the oil seal due to an unchamfered or improperly chamfered housing.	• Chamfer the housing bore. (Refer to page 30. “6. HOUSING AND SHAFT DESIGN GUIDE”)
		• The OD of the seal was gouged due to mislaignment of the assembly jig with the housing.	• Properly align the jig with the housing.
The oil seal is problem-free.	—	• The housing bore ID surface was scratched because the seal was inserted with metal shavings or other foreign matter caught between the seal and the bore. • The bore ID surface is scratched due to repeated seal removal and installation. • There was large porosity on the bore ID.	• Apply a thin coat of liquid gasket sealant so that the scratches and porosity on the bore ID hole are filled. Use care not to contaminate the seal lip or the shaft with the sealant.
		• The housing bore ID surface was scratched due to seal installation with burrs on the bore chamfer.	• Remove the seal and check for grooving on the chamfered area of the housing bore. Remove these grooves and apply liquid gasket sealant to the bore ID surface.
	—	• The bore ID surface is too rough.	• Quick solution: Apply liquid gasket sealant to the housing bore ID. • Permanent solution: Finish the bore ID surface to the correct roughness. (Refer to pages 38 through 43)

9. SERVICE LIFE OF AN OIL SEAL

The failure modes and ultimate service life will vary according to the usage conditions, including operating, environmental, and lubrication conditions.

The following will discuss the degradation of lip materials and lip wear (causing a loss of lip-to-shaft interference), which are responsible for the most common oil seal failures.

(1) Lip Material Degradation

Material degradation consists of hardened or softened rubber, cracks, or taking a set. The sealing ability of an oil seal is reduce or eliminated when the lip contact area is hardened or cracked, or the lip-to-shaft interference is decreased.

This degradation often occurs as a result of a chemical reaction between the rubber and the sealing fluid, or a substance intermingled with or dissolved in the sealing fluid. Generally, degradation advances rapidly as the oil temperature increases, shortening the service life of the oil seal.

Fig. 9-1 shows the service life of various oil seal materials vs. the temperature at the lip contact area (for reference only).

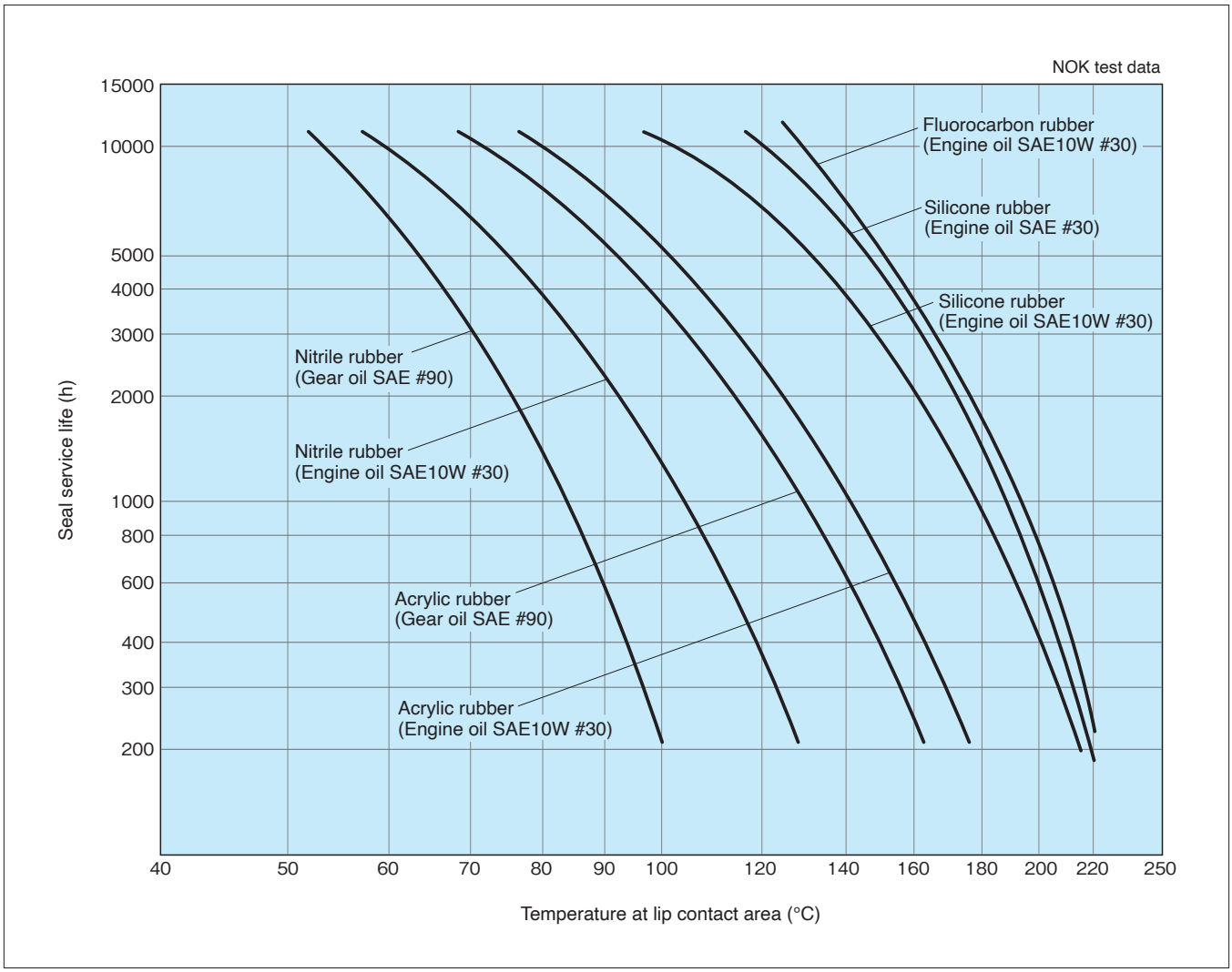

Fig. 9-1 Shows the service life of various oil seal materials vs. the temperature at the lip contact area (for reference only).

(2) The Effects of Lip Wear

When there is sufficient lubrication, an oil seal continually circulates oil underneath the lip, thus minimizing lip wear. Lip wear is accelerated by a lack of or degradation of the lubricant, foreign matter trapped in the lubricant, or the entry of external dust under the main lip.

Fig. 9-2 shows the relationship between the size of foreign matter and the resulting lip wear.

Small size of foreign matter (around 0.3 μm) increase the lip and shaft wear.

Lip wear causes lip-to-shaft interference to decrease, thereby decreasing the seal's ability to compensate for shaft eccentricity. Therefore, the life of a seal with respect to lip wear expires when the lip interference can no longer follow an eccentric shaft (shaft run-out).

Fig. 9-3 shows an example of the shaft eccentricity limits of a worn oil seal. Leakage occurs when the lip interference value falls below approximately twice the shaft eccentricity (shaft run-out). Since the progress of lip wear is largely influenced by the quantity of lubricant or other environmental conditions, such as the presence of foreign matter in the lubricant, the performance of oil seals varies according to the actual application conditions.

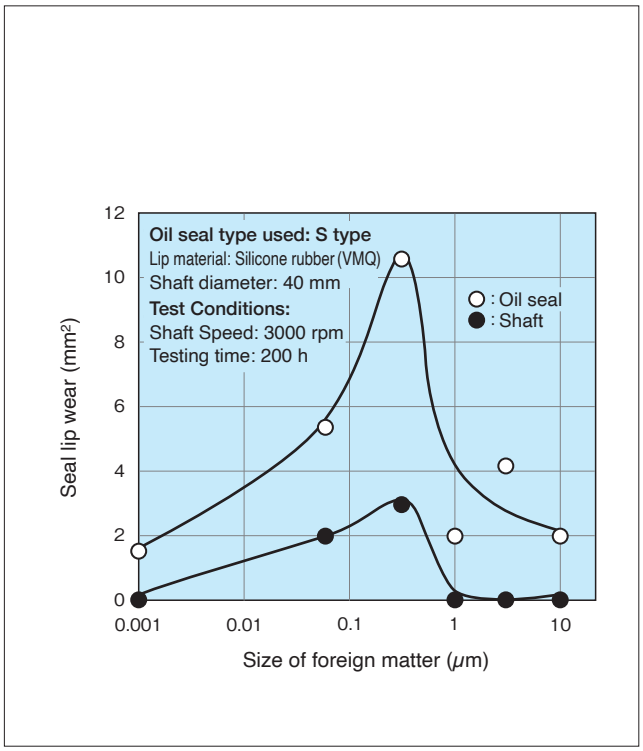

Fig. 9-2 Seal Lip Wear vs Size of Foreign Matter

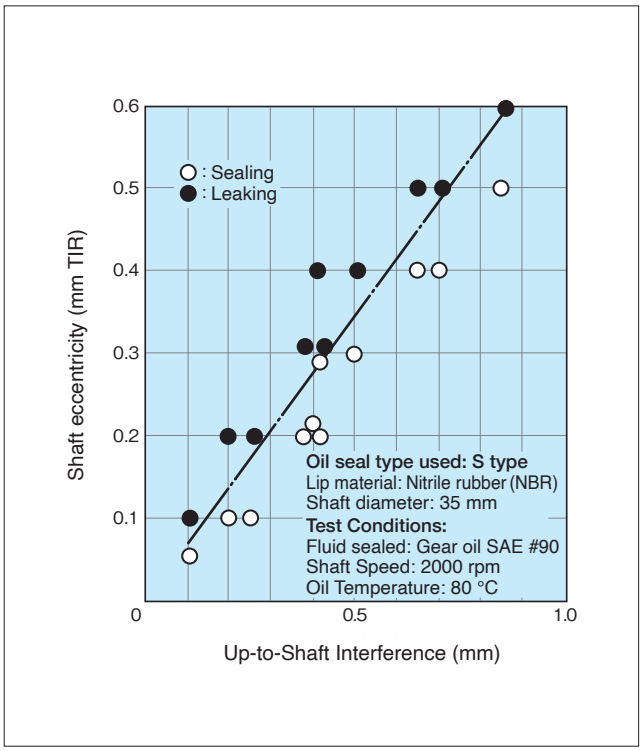

Fig. 9-3 Shaft Eccentricity Limits vs Seal Lip Interference (TIR: Total Indicator Reading)

10. FRICTIONAL TORQUE OF AN OIL SEAL

The frictional torque of an oil seal can be expressed by equation (1).

$$T = f \cdot P_r \cdot r \quad \cdots\cdots\cdots\cdots (1)$$

T = frictional torque (N·cm {kgf·cm})
f = coefficient of friction
P_r = radial lip load onto shaft (N{kgf})
r = radius of shaft (cm)

The coefficient of friction (f) is determined by many factors, but it generally means dynamic friction under lubricated conditions, and can be expressed by equation (2).

$$f = \Phi(\mu \cdot u \cdot b / P_r)^{1/3} \quad \cdots\cdots\cdots\cdots (2)$$

Φ = constant determined by the state of the oil film
μ = viscosity of sealing fluid(N·s/cm^2){kgf·s/cm^2}
u = linear shaft speed (cm/s)
b = lip-to-shaft contact width (cm)

It becomes evident that the coefficient of friction (f) for a specific oil seal is influenced by the viscosity (m) of the sealing fluid and the linear shaft speed (u). Fig.10-1 shows the relationship between frictional torque and oil temperature by oil type. Frictional torque decreases as the oil's viscosity decreases. Also, frictional torque is inversely related to the oil temperature, since oil becomes less viscous as oil temperature increases.

The linear shaft speed also influences frictional torque. Fig.10-2 and 10-3 show the relationship between shaft speed and frictional torque.

Fig.10-2 shows a case in which the oil temperature is constant. Frictional torque increases as shaft speed increases.

Fig.10-3 shows a case in which the grease temperature is not controlled (heated naturally via friction). Frictional torque decreases as shaft speed increases. This is because as the shaft speed increases, the grease temperature increases due to the heat generated by friction, thus decreasing the its viscosity and the overall frictional torque.

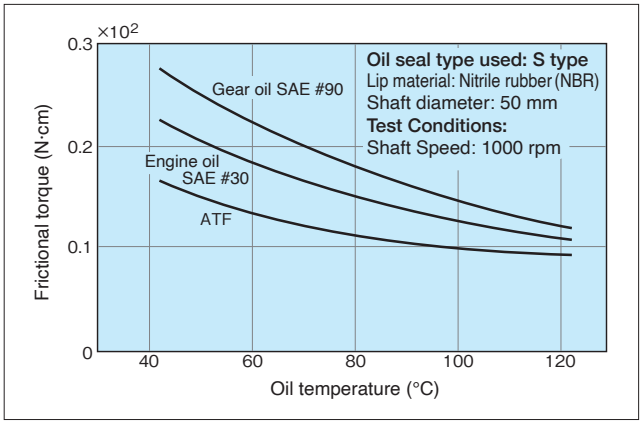

Fig. 10-1 Frictional Torque vs Oil Temperature for Several Oils

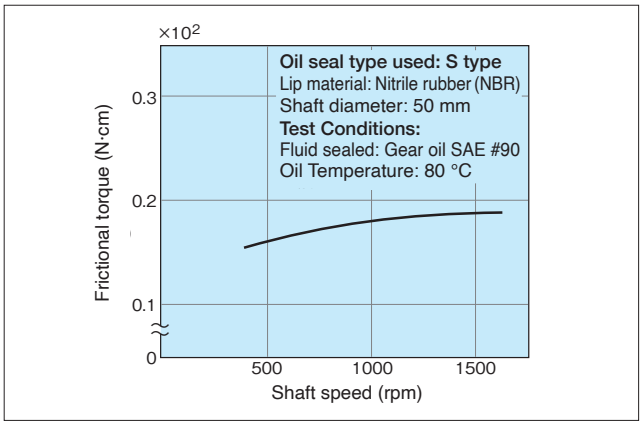

Fig. 10-2 Frictional Torque vs Shaft Speed (with constant oil temperature)

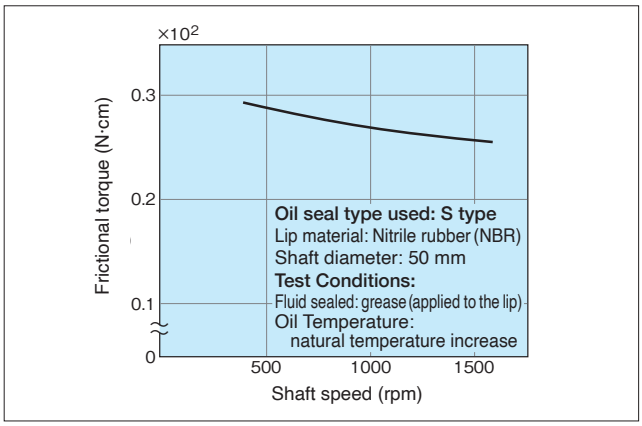

Fig. 10-3 Frictional Torque vs Shaft Speed (with a natural temperature increase)

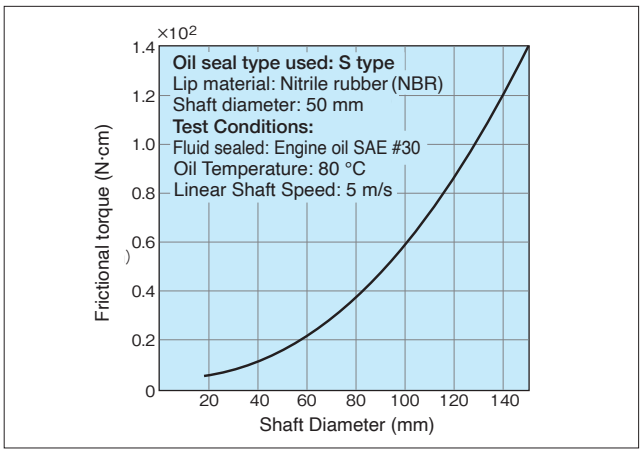

Fig. 10-4 Frictional Torque vs Shaft Diameter (reference only)

11. OIL AND CHEMICAL RESISTANCE RATINGS OF LIP MATERIALS

The following data is a summary of material test results. It shows the resistance of each lip material to various lubricants and chemicals.

After selecting the lip material in the section “5. OIL SEAL APPLICATION GUIDE” on page 24, use this data to check the resistance of the lip material to the specific brand of oil or chemical.

Symbols in the “Material Resistance Rating” column are as follows:

◎ : Good resistance
○ : Resistance, except in special cases *
△ : No resistance, except in special cases *
× : No resistance

*Consult NOK before use

How to Read the Table

The test method used are in accordance with JIS K 6258 “Testing methods of the effect of liquids for vulcanized rubber” and JIS K 6253 “Hardness testing methods for rubber, vulcanized or thermoplastic”. The table displays the test temperature and time, and the post-test changes in hardness and volume.

Hardness and volume change data indicate the post-test change in hardness against the pre-test hardness, and the post-test change in volume against the pre-test volume of the test piece, respectively. Plus (+) indicates that the hardness or volume increased after the test, while minus (-) indicates that the hardness or volume decreased after the test. The absolute value is inversely related to the oil or chemical resistance of the material.

The resistance of each lip material is determined by assuming that it is used for 500 hours continuously at the listed test temperature, and based on the indicated test results.

In most cases, the stability of the lip material can be determined by consulting the hardness change and volume change data; however, some materials may be classified as △ or × despite their small hardness or volume change values. Such classifications are based on other considerations and do not contradict the above-mentioned general principles.

For the classification of oil types, refer to the “Lubricant Brand Guide” published by the Lubrication News Agency. Please refer to the guide for the properties of each oil type. Temperature Duration Hardness Ratinaerial

There are cases in which an inorganic acid, organic acid, alkaline acid, or inorganic salt should not be used due to environmental conditions. Please consult with us before use.

Oil Resistance Data

	Sealing Fluid (Manufacturer)	NOK Lip Material	Test Temperature (°C)	Test Duration (h)	Hardness Change (Durometer A) (points)	Volume Change (%)	Resistance Ratinaerial
Engine Oils	Apolloil Auto Lube 30 SD (Idemitsu Petrochemical)	A727	100	200	0	−0.9	◎
			120	200	0	−0.9	○
		A941	100	200	4	−2.1	◎
			120	200	6	−2.7	△
		A795	100	200	6	−6.7	○
			120	200	9	−7.5	△
		A275	100	200	5	−8.9	○
			120	200	6	−9.2	△
		T303	120	200	0	−1.4	◎
			130	70	−1	0.4	◎
			130	500	2	0.3	◎
			150	200	1	−0.6	○
		T599	120	200	2	−1.5	◎
			130	70	−1	−0.2	◎
			130	500	4	−0.3	◎
			150	70	2	−2.3	○
			150	200	0	−1.3	○
			150	500	6	−3.5	○
		S728	150	200	−6	8.8	○
			175	200	−9	10.4	△
		F585	150	200	−2	1.0	◎
			175	200	−2	1.1	○
		F975	150	200	1	2.0	◎
			175	200	3	2.3	○

Oil Resistance Data

	Sealing Fluid (Manufacturer)	NOK Lip Material	Test Temperature (°C)	Test Duration (h)	Hardness Change (Durometer A) (points)	Volume Change (%)	Resistance Ratinaerial
Engine Oils	New Pan 10W-30 SG (Nippon Oil)	A727	100	200	−5	3.1	◎
			120	200	2	3.2	○
		A941	100	200	2	1.1	◎
			120	200	7	−0.6	△
		A795	100	200	5	−4.2	○
			120	200	12	−6.1	×
		A275	100	200	−1	−5.7	○
			120	200	4	−5.3	△
		T303	120	200	0	2.8	◎
			150	200	1	2.6	○
		T599	120	200	1	1.9	◎
			150	200	−1	2.6	○
		S728	150	200	−13	19.9	○
			175	200	−20	25.2	△
		F585	150	200	0	1.8	◎
			175	200	2	2.4	○
		F975	150	200	2	2.0	◎
			175	200	6	2.3	○
	Shell Formula X 5W-30 SG (Showa Shell Petroleum)	A727	100	200	−1	−0.1	◎
			120	200	13	−0.3	×
		A941	100	200	4	−1.1	◎
			120	200	9	−2.6	△
		A795	100	200	7	−5.6	△
			120	200	12	−6.8	×
		A275	100	200	3	−8.6	○
			120	200	7	−8.7	△
		T303	120	200	0	1.1	◎
			150	200	1	−0.3	○
		T599	120	200	1	0.0	◎
			150	200	−1	−0.8	○
		S728	150	200	−13	17.0	○
			175	200	−16	20.4	△
		F585	150	200	−4	0.9	◎
			175	200	−1	1.4	○
		F975	150	200	1	1.4	◎
			175	200	3	1.5	○
	Mobil1 5W-30 SE/CC (Mobil)	A727	100	200	−1	1.2	◎
			120	200	4	1.1	○
		A941	100	200	2	−0.6	◎
			120	200	10	−2.2	△
		A795	100	200	7	−6.0	△
			120	200	13	−7.0	×
		A275	100	200	3	−7.3	○
			120	200	11	−7.0	×
		T303	120	70	1	0.9	◎
			120	200	−1	1.7	◎
			120	500	4	0.1	◎
			150	70	1	1.0	○
			150	200	0	1.6	○
			150	500	6	1.0	○
		T599	120	200	0	1.4	◎
			150	200	−2	1.7	○
		S728	150	200	−14	17.5	○
			175	200	−18	20.2	△
		F585	150	200	−1	1.5	◎
			175	200	0	1.9	○
		F975	150	200	3	1.4	◎
			175	200	5	2.0	○
	General Motor Oil G-10 mX 5W-50 SG (General Petroleum)	A727	100	200	2	0.6	◎
			120	200	5	0.1	○
		A941	100	200	3	−1.0	◎
			120	200	7	−2.0	△
		A795	100	200	6	−5.9	○
			120	200	12	−7.3	×
		A275	100	200	2	−8.1	○
			120	200	5	−7.5	△
		T303	120	200	1	1.4	◎
			150	200	2	1.3	○
		T599	120	200	2	0.6	◎
			150	200	0	1.2	○
		S728	150	200	−13	18.3	○
			175	200	−20	23.2	△

Oil Resistance Data

	Sealing Fluid (Manufacturer)	NOK Lip Material	Test Temperature (°C)	Test Duration (h)	Hardness Change (Durometer A) (points)	Volume Change (%)	Resistance Ratinaerial
Engine Oils	General Motor Oil G-10 mX 5W-50 SG (General Petroleum)	F585	150	200	0	1.7	◎
			175	200	2	2.0	○
		F975	150	200	2	1.5	◎
			175	200	5	1.8	○
	Apolloil Gezelube 20CB (Idemitsu Petrochemical)	A103	100	70	0	−2.0	◎
		T303	130	70	1	2.7	◎
	High Diesel S-3 30CD (Nippon Oil)	A727	100	70	1	−3.5	◎
		T303	130	70	1	0.1	◎
	Gepro SJ/SL 5W-30 (Idemitsu Petrochemical)	T945	150	200	−5	4.2	○
	Motor Oil Touring 10W-30 SJ/SL (Nisseki Mitsubishi)	T945	150	200	−4	3.5	○
	Shell Helix Premium 5W-30 (Showa Shell Petroleum)	T945	150	200	−6	4.9	○
	Mobil1 5W-40 SJ/SL (Mobil)	T945	150	200	−10	8.2	△
Gear Oils (for Vehicles)	Apolloil Gear ZEX 90·GL-6 (Idemitsu Petrochemical)	A727	100	200	−3	3.6	◎
			120	200	5	5.1	○
		A941	100	200	2	1.9	◎
			120	200	9	2.7	△
		A795	100	200	5	−3.3	○
			120	200	11	−3.7	×
		A275	100	200	4	−4.3	○
			120	200	11	−2.8	×
		A437	100	200	2	−1.7	◎
			120	200	10	−0.1	△
		A989	100	200	4	−1.8	◎
			120	200	14	−1.0	×
		A103	100	200	4	−1.6	◎
			120	200	13	0.0	×
		T303	120	200	−3	2.4	◎
			150	200	1	2.3	○
		T599	120	200	−2	1.3	◎
			150	200	−5	1.7	△
		T945	150	200	−9	5.1	△
		S728	150	200	Immeasurable	Immeasurable	×
			175	200	Immeasurable	Immeasurable	×
		F585	150	200	0	2.7	○
			175	200	4	3.5	△
		F975	150	200	2	2.2	○
			175	200	7	2.5	△
	Apolloil TH Universal 10W-30 (Idemitsu Petrochemical)	A727	100	200	−4	4.2	◎
			120	200	−2	5.0	○
		A941	100	200	0	2.4	◎
			120	200	6	1.1	△
		A795	100	200	4	−3.0	○
			120	200	10	−4.8	△
		A275	100	200	4	−4.7	○
			120	200	3	−4.0	△
		A437	100	200	2	−1.0	◎
			120	200	3	−0.2	△
		A989	100	200	0	−0.5	◎
			120	200	3	−0.9	△
		A103	100	200	−1	−1.6	◎
			120	200	3	−1.4	△
		T303	120	200	−2	3.8	◎
			150	200	−1	3.6	○
		T599	120	200	−2	3.7	◎
			150	200	−3	3.4	△
		T945	150	200	−13	11.1	×
		S728	150	200	−16	20.1	×
			175	200	−33	20.6	×
		F585	150	200	−2	1.8	○
			175	200	−1	2.8	△
		F975	150	200	2	1.9	○
			175	200	4	2.8	△
	Gear Lube EHD 80·GL-5 (Nippon Oil)	A727	100	200	−3	1.9	◎
			120	200	2	2.6	○
		A941	100	200	4	0.5	◎
			120	200	9	0.5	△
		A795	100	200	6	−4.6	○
			120	200	11	−5.3	×
		A437	100	200	5	−3.2	○
			120	200	9	−2.7	△
		A989	100	200	5	−3.0	○
			120	200	11	−3.0	△

Oil Resistance Data

	Sealing Fluid (Manufacturer)	NOK Lip Material	Test Temperature (°C)	Test Duration (h)	Hardness Change (Durometer A) (points)	Volume Change (%)	Resistance Ratinaerial
Gear Oils (for Vehicles)	Gear Lube EHD 80·GL-5 (Nippon Oil)	A103	100	200	4	−3.3	◎
			120	200	10	−2.8	△
		T303	120	200	1	1.2	◎
			150	200	2	1.3	○
		T599	120	200	1	0.4	◎
			150	200	−1	0.7	○
		S728	150	200	Immeasurable	Immeasurable	×
			175	200	Immeasurable	Immeasurable	×
		F585	150	200	0	1.7	○
			175	200	5	2.3	△
		F975	150	200	4	1.2	○
			175	200	7	1.5	△
	Spilacs EP90·GL-4 (Showa Shell Petroleum)	A727	100	200	−2	0.6	◎
			120	200	5	1.1	○
		A941	100	200	3	−0.4	◎
			120	200	7	−0.6	△
		A795	100	200	6	−5.4	○
			120	200	11	−6.3	×
		A275	100	200	6	−7.3	○
			120	200	11	−7.3	×
		A437	100	200	4	−4.7	◎
			120	200	10	−4.1	△
		A989	100	200	6	−3.8	○
			120	200	12	−3.9	×
		A103	100	200	5	−4.0	○
			120	200	11	−4.0	×
		T303	120	200	0	−0.3	◎
			150	200	3	0.3	○
		T599	120	200	−1	−1.0	◎
			150	200	−2	−0.8	○
		S728	150	200	−6	−0.2	○
			175	200	−8	−3.2	△
		F585	150	200	0	1.4	○
			175	200	2	2.0	△
		F975	150	200	4	1.0	○
			175	200	6	1.0	△
	Apolloil Gear HE90·GL-4 (Idemitsu Petrochemical)	T303	90	480	−2	6.4	◎
			110	240	−2	6.2	◎
	Apolloil Wide Gear LW 80W-90·GL-5 (Idemitsu Petrochemical)	T303	120	70	1	0.0	◎
			120	200	2	−0.1	◎
			120	500	2	0.5	◎
			150	200	3	0.1	○
			150	500	6	−0.3	○
	Gear Lube SP 90·GL-4 (Nippon Oil)	A727	120	70	2	−1.2	○
		A795	120	70	6	−7.0	△
		T599	80	70	−1	−0.7	◎
	Antoil B 80W (Nippon Oil)	A727	100	70	−6	1.8	○
	Diamond EP Gear Oil 80·GL-3 (Mitsubishi Oil)	A727	100	70	−1	−0.3	◎
		A795	100	70	0	−2.9	◎
	Diamond EP Gear Oil 90·GL-3 (Mitsubishi Oil)	A727	100	70	0	0.2	◎
		T303	100	70	−2	1.6	◎
		T945	150	200	−5	1.7	○
	Diamond Hypoid Gear Oil 90·GL-4 (Mitsubishi Oil)	T303	130	70	1	0.7	◎
			130	500	5	1.2	◎
			150	70	1	1.0	○
			150	300	6	1.0	○
			150	500	9	−3.5	○
		T599	100	70	0	−0.9	◎
Class 2 Gear Oils for Industrial Use (Extreme Pressure)	(Polyglycol base) Synthese D68EP (NOK Klüber)	A727	100	200	−8	7.2	△
			120	200	−13	12.4	×
		A941	100	200	−1	4.1	◎
			120	200	−1	5.6	○
		A795	100	200	2	−2.1	◎
			120	200	4	−1.8	○
		A275	100	200	−2	0.3	◎
			120	200	−2	1.6	○
		A437	100	200	−1	5.6	◎
			120	200	−5	3.1	○
		A989	100	200	−2	1.3	◎
			120	200	−3	1.0	○
		A103	100	200	−2	2.6	◎
			120	200	−3	2.0	○

Oil Resistance Data

	Sealing Fluid (Manufacturer)	NOK Lip Material	Test Temperature (°C)	Test Duration (h)	Hardness Change (Durometer A) (points)	Volume Change (%)	Resistance Ratinaerial
Class 2 Gear Oils for Industrial Use (Extreme Pressure)	(Polyglycol base) Synthese D68EP (NOK Klüber)	T303	120	200	−24	45.1	×
			150	200	−26	59.5	×
		T599	120	200	−25	47.5	×
			150	200	−34	69.1	×
		S728	150	200	−6	−0.2	△
			175	200	Immeasurable	Immeasurable	×
		F585	150	200	−1	1.4	◎
			175	200	1	2.0	△
		F975	150	200	3	1.4	◎
			175	200	6	0.9	△
	Synthese D680 (NOK Klüber)	T945	150	200	−15	12.9	×
	(Polyglycol base) Synthese D460EP (NOK Klüber)	A727	100	200	−1	−2.2	◎
			120	200	0	−2.0	○
		A941	100	200	4	−2.6	◎
			120	200	3	−2.5	○
		A795	100	200	6	−6.6	○
			120	200	7	−7.1	△
		A275	100	200	2	−9.5	○
			120	200	3	−9.1	△
		A437	100	200	5	−7.3	○
			120	200	5	−7.5	△
		A989	100	200	5	−6.8	○
			120	200	5	−6.7	△
		A103	100	200	3	−7.1	○
			120	200	4	−6.8	△
		T303	120	200	−8	8.5	△
			150	200	−7	11.9	△
		T599	120	200	−9	10.4	△
			150	200	−14	13.9	×
		S728	150	200	Immeasurable	Immeasurable	×
			175	200	Immeasurable	Immeasurable	×
		F585	150	200	4	1.7	○
			175	200	11	3.3	×
		F975	150	200	5	1.1	○
			175	200	11	1.9	×
	(Polyglycol base) Synthese HT220 (NOK Klüber)	A727	100	200	−3	1.7	◎
			120	200	−4	2.5	○
		A941	100	200	2	−0.7	◎
			120	200	3	0.0	○
		A795	100	200	5	−5.4	○
			120	200	6	−5.7	△
		A275	100	200	1	−5.0	◎
			120	200	1	−5.1	○
		A437	100	200	3	−2.9	◎
			120	200	4	−2.9	○
		A989	100	200	2	−3.3	◎
			120	200	4	−3.3	○
		A103	100	200	2	−2.9	◎
			120	200	3	−3.0	○
		T303	120	200	−11	19.1	×
			150	200	−8	23.0	×
		T599	120	200	−16	24.7	×
			150	200	−21	32.2	×
		T945	150	200	−21	27.8	×
		S728	150	200	1	1.7	○
			175	200	0	1.8	△
		F585	150	200	−3	0.7	◎
			175	200	2	1.5	△
		F975	150	200	0	0.5	◎
			175	200	6	1.3	△
	(Polyglycol base) Synthese HT680 (NOK Klüber)	A727	100	200	−1	−2.4	◎
			120	200	−1	−2.7	○
		A941	100	200	4	−2.9	◎
			120	200	5	−3.4	○
		A795	100	200	6	−6.8	○
			120	200	8	−8.1	△
		A275	100	200	5	−10.0	○
			120	200	5	−10.0	△
		A437	100	200	6	−8.3	△
			120	200	7	−8.7	△
		A989	100	200	5	−6.7	△
			120	200	7	−7.3	△

Oil Resistance Data

	Sealing Fluid (Manufacturer)	NOK Lip Material	Test Temperature (°C)	Test Duration (h)	Hardness Change (Durometer A) (points)	Volume Change (%)	Resistance Ratinaerial
Class 2 Gear Oils for Industrial Use (Extreme Pressure)	(Polyglycol base) Synthese HT680 (NOK Klüber)	A103	100	200	4	−8.7	○
			120	200	5	−7.1	△
		T303	120	200	−5	5.4	○
			150	200	1	8.0	△
		T599	120	200	−8	7.5	△
			150	200	−12	12.2	×
		S728	150	200	3	0.6	○
			175	200	3	0.3	△
		F585	150	200	−3	0.8	◎
			175	200	4	1.5	△
		F975	150	200	1	0.6	◎
			175	200	8	1.2	△
Machine Oil (Spindle Oil)	No.1 Spindle Oil (Nippon Oil)	A727	80	200	−14	20.7	×
			100	70	−11	25.1	×
			100	200	−14	22.2	×
		A275	80	200	−7	12.1	△
			100	200	−8	12.2	△
		A103	100	70	−16	31.0	×
		G418	80	200	−7	11.3	△
			100	200	−7	11.3	△
		T303	80	200	−11	12.5	△
			100	200	−10	12.8	△
		T599	80	200	−8	12.5	△
			100	200	−9	12.8	△
		S728	80	200	−15	39.4	×
			100	200	−16	42.6	×
		F585	80	200	−4	2.0	◎
			100	200	−4	3.4	◎
		F548	80	200	0	1.2	◎
			100	200	−1	2.9	◎
		F975	80	200	−2	1.6	◎
			100	200	−2	3.1	◎
	No.2 Spindle Oil (Nippon Oil)	A727	100	200	−8	11.1	△
			120	200	−10	11.7	△
		A275	100	200	−2	2.8	○
			120	200	−3	3.3	○
		A103	130	70	−12	12.4	△
		G418	120	200	−1	3.3	◎
			150	200	−1	3.4	△
		T303	120	200	−2	5.8	○
			150	200	−1	6.5	○
		T599	120	200	−3	5.8	○
			150	200	−3	6.5	△
		S728	120	200	−13	23.1	×
			150	200	−15	27.4	×
		F585	120	200	−3	6.8	○
			150	200	−4	7.7	○
		F548	120	200	0	1.6	◎
			150	200	0	2.4	◎
		F975	120	200	−1	2.0	◎
			150	200	−1	3.1	◎
	Super Oil T10 (Nisseki Mitsubishi)	T945	150	200	−8	9.2	△
	Super Oil T22 (Nisseki Mitsubishi)	T945	150	200	−11	13.3	△
Class 2 Turbine Oil	Shell Turbo Oil T32 (Showa Shell Petroleum)	A727	100	200	1	−0.5	◎
			120	200	1	−0.5	○
		A941	100	200	−2	−2.7	◎
			120	200	0	−2.9	○
		A275	100	200	6	−8.5	○
			120	200	10	−8.7	△
		T303	120	200	1	−0.8	◎
			150	200	3	−0.8	○
		T945	150	200	−3	2.8	◎
		S728	150	200	−13	13.9	△
			175	200	−19	17.5	×
		F585	150	200	−3	1.3	◎
			175	200	−3	1.9	○
	Shell Turbo Oil T68 (Showa Shell Petroleum)	A727	100	200	1	−2.1	◎
			120	200	3	−2.1	○
		A941	100	200	5	−2.9	◎
			120	200	5	−3.1	○
		A275	100	200	14	−8.5	×
			120	200	15	−8.7	×

Oil Resistance Data

	Sealing Fluid (Manufacturer)	NOK Lip Material	Test Temperature (°C)	Test Duration (h)	Hardness Change (Durometer A) (points)	Volume Change (%)	Resistance Ratinaerial
Class 2 Turbine Oil	Shell Turbo Oil T68 (Showa Shell Petroleum)	T303	120	200	1	−1.3	◎
			150	200	2	−1.4	○
		T945	150	200	0	0.7	◎
		S728	150	200	−7	9.4	△
			175	200	−11	11.4	△
		F585	150	200	−2	0.6	◎
			175	200	−2	0.9	○
Torque Converter Oil/Automatic Transmission Fluid	Apolloil Mission Fluid (Idemitsu Petrochemical)	A727	100	200	−2	2.8	◎
			120	200	0	2.5	○
		A941	100	200	3	0.9	◎
			120	200	6	−0.2	△
		A795	100	200	5	−3.9	◎
			120	200	11	−5.9	×
		A275	100	200	3	−5.7	○
			120	200	1	−5.6	○
		G418	120	200	5	−4.3	○
			150	200	7	−3.6	△
		T303	120	200	−1	1.6	◎
			150	200	2	1.5	○
		T599	120	200	−1	1.5	◎
			150	200	−3	2.1	△
		S728	150	200	−15	20.6	×
			175	200	−27	22.1	×
		F585	150	200	−1	1.9	○
			175	200	2	2.4	○
		F975	150	200	2	1.6	○
			175	200	4	2.1	○
	Pegasus Torque Converter Fluid (Mobil)	A727	100	200	−3	6.1	○
			120	200	−3	6.1	○
		A941	100	200	1	3.5	◎
			120	200	2	3.2	○
		A795	100	200	5	−1.7	○
			120	200	6	−2.7	△
		A275	100	200	2	−2.5	◎
			120	200	2	−2.0	○
		G418	120	200	2	−1.1	◎
			150	200	4	−1.6	△
		T303	120	200	−3	4.6	◎
			150	200	−2	6.0	○
		T599	120	200	−1	4.5	◎
			150	200	−2	6.3	△
		S728	150	200	−18	34.8	×
			175	200	−22	39.7	×
		F585	150	200	−4	3.2	○
			175	200	−5	4.0	○
		F975	150	200	−2	3.2	○
			175	200	−2	3.9	○
	Apolloil ATF D-2 (Idemitsu Petrochemical)	A727	100	70	−4	2.8	◎
			120	70	−5	3.5	○
			120	140	−6	4.2	○
		A103	100	70	−2	−1.2	◎
			120	70	−2	−1.5	○
			120	140	−2	−2.0	○
		T599	135	70	−2	4.4	◎
			135	300	0	4.1	◎
			135	500	0	3.9	◎
			150	70	−2	4.8	○
			150	300	−1	4.4	○
			150	500	0	4.0	○
		T303	120	70	−2	4.0	◎
			120	500	2	3.2	◎
			150	70	−1	3.9	○
			150	300	3	2.9	○
			150	500	3	2.8	○
			165	70	4	2.8	△
			165	150	7	2.3	△
		S728	150	70	−15	29.7	×
			150	500	−24	31.1	×
			175	70	−25	35.5	×
			175	500	−40	38.7	×
	Mobil ATF 200 (Mobil)	A727	130	70	0	5.4	△
			130	200	3	−9.6	△

Oil Resistance Data

	Sealing Fluid (Manufacturer)	NOK Lip Material	Test Temperature (°C)	Test Duration (h)	Hardness Change (Durometer A) (points)	Volume Change (%)	Resistance Ratinaerial
Torque Converter Oil/ Automatic Transmission Fluid	Mobil ATF 200 (Mobil)	A103	130	70	2	−1.2	△
			130	200	5	−2.6	△
		T303	130	70	0	5.0	◎
			130	200	2	4.4	◎
	Duffny Torque Oil A (Idemitsu Petrochemical)	T945	150	200	−19	22.2	×
	Mobil ATF (Mobil)	T945	150	200	−7	7.7	○
	Zepro ATF (Idemitsu Petrochemical)	F585	175	500	3	2.5	○
Hydraulic Actuation Oil/General Purpose oil for Industrial Use (additive)	Duffny Hydraulic Fluid 32 (Idemitsu Petrochemical)	A727	100	200	2	−0.4	◎
			120	200	1	0.1	○
		A941	100	200	4	−1.5	◎
			120	200	6	−1.3	△
		A795	100	200	8	−5.4	○
			120	200	11	−6.1	×
		A275	100	200	7	−7.9	○
			120	200	9	−8.3	△
		A437	100	200	6	−4.8	○
			120	200	8	−4.9	△
		A989	100	200	6	−3.8	○
			120	200	7	−3.8	△
		A103	100	200	3	−4.6	○
			120	200	4	−4.9	△
		G418	120	200	7	−6.8	○
			150	200	10	−6.8	△
		T303	120	200	0	−0.3	◎
			150	200	2	−0.1	○
		T599	120	200	2	−0.7	◎
			150	200	0	−0.5	○
		S728	150	200	−19	17.0	○
			175	200	−22	17.6	×
		F585	150	200	0	0.9	◎
			175	200	1	1.3	○
		F975	150	200	1	1.6	◎
			175	200	3	1.7	○
		F548	150	200	0	0.9	◎
			175	200	1	1.3	○
	Shell Terrace Oil C10 (Showa Shell Petroleum)	A727	100	200	−5	6.9	○
			120	200	−5	7.7	○
		A941	100	200	0	4.0	◎
			120	200	2	4.0	○
		A795	100	200	4	−1.8	○
			120	200	6	−2.6	△
		A275	100	200	2	−1.6	◎
			120	200	3	−0.8	△
		A989	100	200	−2	1.8	◎
			120	200	1	2.1	○
		A103	100	200	−1	2.0	◎
			120	200	1	1.7	○
		G418	120	200	2	−0.9	◎
			150	200	4	−0.6	△
		T303	120	200	−4	5.2	○
			150	200	−3	6.6	○
		T599	120	200	−2	4.8	◎
			150	200	−4	7.2	△
		T945	150	200	−14	17.3	×
		S728	150	200	−24	50.9	×
			175	200	−28	61.1	×
		F585	150	200	−4	3.9	◎
			175	200	−4	4.9	○
		F975	150	200	−1	3.9	◎
			175	200	−2	4.8	○
		F548	150	200	−1	2.7	◎
			175	200	−1	3.5	○
	Shell Terrace Oil C46 (Showa Shell Petroleum)	A727	100	200	−3	1.5	◎
			120	200	−4	1.1	○
		A941	100	200	3	−0.4	◎
			120	200	5	−0.4	△
		A795	100	200	7	−0.5	○
			120	200	8	−1.4	△
		A275	100	200	5	−6.7	○
			120	200	6	−6.5	△
		A437	100	200	4	−8.0	○
			120	200	4	−10.5	△

Oil Resistance Data

	Sealing Fluid (Manufacturer)	NOK Lip Material	Test Temperature (°C)	Test Duration (h)	Hardness Change (Durometer A) (points)	Volume Change (%)	Resistance Ratinaerial
Hydraulic Actuation Oil/General Purpose oil for Industrial Use (additive)	Shell Terrace Oil C46 (Showa Shell Petroleum)	A989	100	200	4	−3.2	◎
			120	200	6	−3.4	△
		A103	100	200	2	−3.9	◎
			120	200	3	−4.5	○
		G418	120	200	5	−5.8	◎
			150	200	7	−5.8	△
		T303	120	200	−1	0.3	◎
			150	200	2	0.3	○
		T599	120	200	−2	0.0	◎
			150	200	0	0.1	△
		T945	150	200	−4	4.6	○
		S728	150	200	−11	13.8	○
			175	200	−14	16.5	△
		F585	150	200	−4	1.6	◎
			175	200	−5	2.1	○
		F975	150	200	1	1.5	◎
			175	200	0	1.5	○
		F548	150	200	−1	1.1	◎
			175	200	0	1.4	○
	Duffny Neofluid 46 (Idemitsu Petrochemical)	A795	100	70	−12	20.5	×
		T945	150	200	−1	1.2	◎
	Duffny Super Hydro LW 46 (Idemitsu Petrochemical)	A727	100	70	0	−1.1	◎
		A795	100	70	6	−5.4	○
		F585	100	70	1	0.4	◎
	Mulpose 32 (Nippon Oil)	A727	80	168	−2	0.8	◎
		T303	80	168	−2	0.7	◎
	Unipower SQ 32 (Esso)	A727	100	70	−2	0.5	◎
			100	166	0	1.2	◎
	Unipower SQ 46 (Esso)	A727	100	70	0	−0.1	◎
			100	166	1	0.3	◎
	Unipower SQ 68 (Esso)	A727	100	70	0	−0.7	◎
			100	166	1	−0.4	◎
	Mobil Velocity Oil No.3 (Mobil)	A727	80	168	−13	12.0	△
	Mobil Velocity Oil No.6 (Mobil)	A727	80	168	−8	5.7	○
	Kyoseki Hydolux 32 (Kyodo Oil)	A727	80	168	−3	0.2	◎
		A795	80	168	1	−3.5	◎
		T303	80	168	−2	0.3	◎
	Duffny Super Hydro DX32 (Idemitsu Petrochemical)	T945	150	200	−3	3.8	○
	(Phosphoric ester base) Highland FRP46 (Nippon Oil)	A727	100	200	−40	149.4	×
			120	200	−66	202.9	×
		A795	100	200	−30	97.4	×
			120	200	−40	123.7	×
		A437	100	200	−25	93.3	×
			120	200	−28	117.6	×
		T303	100	200	−26	98.4	×
			150	200	−32	123.1	×
		S728	100	200	−2	3.2	◎
			150	200	−7	7.7	△
		F585	100	200	−10	14.5	△
			150	200	−13	19.5	×
		F548	100	200	−4	12.1	△
			150	200	−7	16.2	×
	(Phosphoric ester base) Highland FRP (Nisseki Mitsubishi)	T945	150	200	−34	121.4	×
Fire Resistant Fluid	(Water+glycol base) Moresuco Hydoll HAW (Matsumura Petroleum)	A727	80	200	4	5.7	△
		T303	80	200	−31	29.0	×
		T945	80	200	−33	24.7	×
		S728	80	200	−1	4.7	○
		F585	80	200	1	4.7	○
		F975	80	200	2	4.9	○
	(Water+glycol base) Cosmo Fluid HQ 46 (Cosmo Oil)	A727	80	168	−3	0.2	○
		A103	80	70	−7	2.1	△
		A795	60	70	−4	2.1	○
			80	70	−5	5.2	△
		F585	80	200	6	4.8	○
	(Water+glycol base) Naiback FR200 Fluid (Mobil)	A103	80	70	−7	1.8	△
		A795	80	70	−5	3.0	△
	(Water+glycol base) Mobil Hydro Fluid HFC (Mobil)	A103	80	70	−9	7.7	△
	(Water+glycol base) Kyoseki Hydoria G (Kyoseki Petroleum)	A103	80	70	−6	−0.5	△
	(Oil+water emulsion base) Horto Safe 5040 (E.F. Horton & Co.)	A103	100	70	−9	6.8	△
		S728	100	70	−17	39.0	×

Oil Resistance Data

	Sealing Fluid (Manufacturer)	NOK Lip Material	Test Temperature (°C)	Test Duration (h)	Hardness Change (Durometer A) (points)	Volume Change (%)	Resistance Ratinaerial
Gasoline	Idemitsu 100 Gasoline (High-octane gasoline) (Idemitsu Petrochemical)	A727	25	200	−24	50.1	×
		A795	25	200	−16	23.9	△
		T303	25	200	−25	53.0	×
		T945	25	200	−21	84.7	×
		S728	25	200	−16	110.5	×
		F585	25	200	−4	4.1	○
	Regular Gasoline (General Petroleum)	A795	25	24	−11	21.6	△
			25	72	−15	29.3	△
		F585	25	70	−1	1.0	○
	Nonleaded High-octane Gasoline (Mitsubishi Oil)	F975	25	70	−2	1.8	○
	Magnum 100 (Cosmo Oil)	A795	25	24	−15	34.3	×
			25	72	−17	30.1	×
	Esso Extra (Esso)	A795	25	24	−16	34.8	×
			25	72	−17	30.2	×
	Formula Shell Super X (Show Shell Petroleum)	A795	25	24	−17	34.4	×
			25	72	−17	31.4	×
Light oil/Kerosene/Heavy oil	Light oil (JIS No.2)	A727	25	200	−5	6.6	○
		A795	25	200	3	2.0	○
		T303	25	200	−3	1.9	○
		T945	25	200	−8	9.9	△
		S728	25	200	−13	44.7	×
		F585	25	200	0	−0.2	◎
	Kerosene	A795	25	200	−1	3.3	◎
		T303	80	168	−11	13.9	×
		F585	25	200	−1	0.2	◎
	Heavy oil (C heavy oil)	A727	50	200	−7	−7.8	△
		A795	50	200	0	−2.8	○
		A941	50	200	−2	−6.3	△
		T303	50	200	−5	−3.5	○
		T945	50	200	−7	7.0	△
		S728	50	200	−5	−11.6	△
		F585	50	200	−2	−0.5	◎
Cutting Fluid	Similon VLQ-25 (Daido Chemicals)	A727	100	70	2	4.2	○
	Shell Macron Oil 27 (Showa Shell Petroleum)	S728	120	70	−12	30.5	×
Rust preventive oil	Standard Anit-rust ND32 (Mobil)	A103	120	70	−10	13.3	△
		S728	120	70	−10	58.8	×
Insulating Oil	Insulating Oil JIS No.2 (Nippon Oil)	A103	100	70	−5	7.3	○
	Insulating Oil JIS No.3 (Idemitsu Petrochemical)	A103	100	70	−6	11.5	○
	Cable Filler No.58	A103	100	70	2	−2.8	○
		S728	120	70	−1	4.2	◎
Grease	Auto Lex A (Idemitsu Petrochemical)	A727	100	70	−2	0.9	◎
			100	200	−2	1.1	◎
		A941	100	200	1	0.0	◎
		A795	100	200	5	−4.7	○
		A275	100	200	3	−7.2	○
		A437	100	200	5	−4.2	○
		A571	100	200	1	−3.3	◎
		A368	100	200	−2	2.2	◎
		A103	100	70	1	−1.7	◎
			100	200	2	−4.7	◎
		T303	100	70	−2	2.4	◎
			100	200	−2	−0.4	◎
		T599	100	200	−3	−0.1	◎
		T945	100	200	−3	2.2	◎
		S728	100	200	−2	5.0	◎
		S817	100	200	−4	4.7	◎
		F585	100	200	−4	0.3	◎
		F975	100	200	0	0.2	◎
	(Fluorocarbon oil base) SEALUB S-11 (NOK Klüber)	A727	100	200	2	−1.1	◎
		A941	100	200	4	−0.7	◎
		A795	100	200	4	−1.8	◎
		A275	100	200	2	−2.9	◎
		A437	100	200	3	−2.8	◎
		A571	100	200	3	−1.5	◎
		A368	100	200	2	−0.5	◎
		A103	100	200	2	−1.6	◎
		T303	100	200	−3	−1.0	◎
		T599	100	200	−1	−1.1	◎
		T945	100	200	−2	0.2	◎
		S728	100	200	3	−0.7	◎
		S817	100	200	−1	1.0	◎
		F585	100	200	−1	0.0	◎

Oil Resistance Data

	Sealing Fluid (Manufacturer)	NOK Lip Material	Test Temperature (°C)	Test Duration (h)	Hardness Change (Durometer A) (points)	Volume Change (%)	Resistance Ratinaerial
Grease	(Fluorocarbon oil base) SEALUB S-11 (NOK Klüber)	F975	100	200	−1	−0.6	◎
			150	70	2	0.0	◎
	(Mineral oil base) DUOTEMP PASTE (NOK Klüber)	A727	100	70	−3	1.5	◎
			100	250	−2	1.1	◎
		T303	100	70	−1	0.4	◎
			100	250	−1	0.2	◎
	(Ester base) ISOFLEX NBU15 (NOK Klüber)	A727	70	70	−3	3.3	◎
	(Mineral oil base) SEALUB S-1 (NOK Klüber)	A727	100	70	−1	0.6	◎
		A103	100	70	−2	−2.1	◎
		A275	80	70	1	−7.1	○
		A571	100	70	0	−1.8	◎
		T599	120	70	3	3.3	◎
			150	70	−2	2.9	◎
	(Poly α olefin base) SEALUB S-14 (NOK Klüber)	A727	100	70	0	−0.8	◎
		A103	70	70	0	−3.5	◎
			100	70	−3	−4.8	◎
		T303	150	70	3	−0.8	◎
		T945	100	200	−3	0.4	◎
		S728	150	70	−8	15.0	△
	(Mineral oil base) Anbligon TA30/0 (NOK Klüber)	A727	100	70	1	−1.4	◎
	Beacon 325 (Esso)	A727	70	70	−17	23.0	×
		A103	60	70	−10	10.1	△
	O.S. Grease No.1 (Kyodo Oil and Fat)	A727	100	70	−1	2.7	◎
		T303	130	70	−5	1.4	◎
	Multemp MS No.2 (Kyodo Oil and Fat)	A727	70	70	−19	30.7	×
	Multi Knock Urea (Nippon Oil)	T599	100	70	−2	1.4	◎
			120	70	−2	1.9	◎
	Albania Grease 3 (Showa Shell Petroleum)	F585	120	70	−1	1.1	◎
			150	70	0	2.0	◎
			175	70	1	2.4	○
	Albania EP Grease 2 (Showa Shell Petroleum)	A103	100	70	−6	0.2	◎
			100	500	−3	−0.1	◎
			120	70	−5	0.0	○
			120	500	0	−0.2	○
			150	70	−4	0.2	×
			150	500	5	2.3	×
		A275	100	70	1	−6.3	○
Brake Fluid	(Glycol ether base) DOT 3	A727	100	200	−33	70.1	×
		T303	100	200	−42	131.2	×
		T945	100	200	−42	104.0	×
		S728	100	200	−3	4.0	◎
		F585	100	200	−35	54.0	×
		E309	100	200	−4	4.2	◎
		R189	100	200	−7	11.5	○
		R188	100	200	−10	8.3	○
		E747	100	200	−8	3.0	◎
	(Glycol ether base) DOT 5	A727	100	200	−42	71.5	×
		T303	100	200	−40	126.1	×
		S728	100	200	−4	3.7	◎
		F585	100	200	−53	121.0	×
		E309	100	200	−5	3.2	◎
		R189	100	200	−9	11.5	○
	(Silicone oil base) DOT 5	A727	100	200	−5	5.9	○
		T303	100	200	−9	5.3	○
		S728	100	200	−18	40.1	×
		F585	100	200	−17	22.5	×
		E309	100	200	−6	5.2	○
		R189	100	200	−4	5.3	○
	Sigma Brake Fluid DOT 5.1	T945	100	200	−38	106.3	×
MIL Fluid	MIL-H-5606 Aerohydraulic Oil HFA (Mobil)	A727	100	70	−3	7.7	○
		A103	80	70	−1	4.1	◎
		S728	150	70	−18	83.1	×
	MIL-L-6086 Type 1	A103	100	70	−3	6.1	○
		S728	100	76	−17	77.5	×
	MIL-L-6086 Aeroshell Fluid 5L	S728	25	70	−6	10.3	△
	MIL-L-7808 Esso Turbo Oil TJ-15 (Esso)	S728	100	70	−8	18.1	△
	MIL-L-7808 (Aplex S Turbo #256 (Mobil)	S728	120	70	−11	20.5	△
			150	70	−14	28.3	×
	MIL-L-23699 Esso Extra Turbo Oil #274 (Esso)	A727	150	70	−16	31.4	×
		T303	150	70	−11	27.6	×
		S728	150	70	−8	12.6	△
	MIL-L-23699 Mobil Jet Oil II (Mobil)	S728	120	70	−5	7.2	○

Oil Resistance Data

	Sealing Fluid (Manufacturer)	NOK Lip Material	Test Temperature (°C)	Test Duration (h)	Hardness Change (Durometer A) (points)	Volume Change (%)	Resistance Ratinaerial
Fluorine oil	Daifuroru #20 (Daikin Industries)	S728	100	48	−2	6.7	◎
	BARIERTA J100 FLUID (NOK Klüber)	A103	70	100	−4	−0.8	◎
			70	166	1	−0.2	◎
		T303	70	100	−4	0.2	◎
			70	166	1	−0.8	◎
			70	200	−3	0.0	◎
Silicone oil	KF96 10cSt (Shin-Etsu Chemical)	S728	100	70	−20	75.8	×
	KF96 10000cSt (Shin-Etsu Chemical)	A103	100	70	7	−6.3	○
			120	70	9	−6.9	△
		S728	120	70	−4	8.0	△
Vegetable oil	Castor oil	A103	100	70	−3	2.1	◎
Water	Distilled water	A727	98	200	5	6.8	○
		A941	98	200	0	9.5	○
		A275	98	200	−2	1.6	◎
		A571	98	200	−2	5.5	◎
		A368	98	200	−1	2.4	◎
		A989	98	200	−6	8.0	○
		A103	98	200	−5	5.2	○
		T303	98	200	−27	46.8	×
		S728	98	200	1	3.4	○
		S817	98	200	0	1.0	○
		F585	98	200	1	8.0	○
	Sea water	A727	40	168	−1	1.7	◎
		A103	20	320	−3	0.8	◎
		T303	40	168	−5	21.8	×
		S728	40	168	−3	0.4	○
Test oil	ASTM No.1 oil (Nippon Sun Petroleum)	A727	100	70	1	−1.7	◎
			120	70	4	−3.1	○
		A103	80	70	2	−4.1	◎
			100	70	3	−4.4	◎
			120	70	4	−6.4	○
			130	70	5	−4.9	△
		A104	100	70	3	−5.6	◎
			130	70	3	−5.0	△
		A795	100	70	6	−6.6	◎
		T303	150	70	3	−2.0	◎
			175	70	6	−3.2	△
		S728	150	70	1	3.5	◎
			175	70	−2	7.0	△
			200	70	−8	6.2	×
		F585	150	70	−1	0.2	◎
			175	70	−1	0.3	◎
	ASTM No.3 oil (Nippon Sun Petroleum)	A727	100	70	−6	10.0	○
			120	70	−9	10.1	△
		A103	80	70	−8	10.3	○
			100	70	−9	11.7	○
			120	70	−7	9.5	○
			130	70	−9	10.8	△
		A104	100	70	−8	8.7	○
			130	70	−9	10.0	△
		A795	100	70	0	2.5	◎
		T303	150	70	−4	9.5	○
			175	70	−1	11.1	△
		S728	150	70	−7	27.5	△
			175	70	−11	40.0	×
			200	70	−21	47.5	×
		F585	150	70	−2	2.6	◎
			175	70	−2	3.2	◎
	ASTM flame-retardant oil B	S728	25	70	Immeasurable	215.0	×

Chemical Resistance Data

Note: Please refer to page 62 when using the product.

	Sealing Fluid	NOK Lip Material	Test Temperature (°C)	Test Duration (h)	Hardness Change (Durometer A) (points)	Volume Change (%)	Resistance Ratinaerial
Inorganic acids (see note)	10% hydrochloric acid solution	A727	40	168	−5	14.8	△
		T303	40	168	−6	8.6	○
		T945	40	168	−20	29.0	×
		S728	40	168	−3	8.1	○
		F585	40	168	−1	1.4	◎
	30% sulfuric acid solution	A727	40	168	—	0.3	△
		T303	40	168	—	3.7	△
		T945	40	168	−4	3.8	△
		S728	40	168	—	0.3	△
		F585	40	168	0	0.2	◎
	Sulfurous acid	A727	40	168	−15	157.0	×
		T303	40	168	−21	100.0	×
		S728	40	168	−5	43.7	×
		31BF	—	—	—	—	◎
	10% nitric acid solution	A727	40	168	14	31.0	×
		T303	40	168	−19	40.0	×
		S728	40	168	2	21.2	×
		F585	40	168	−7	14.3	△
	Chromic acid (saturated aqueous solution)	A727	40	168	Immeasurable	Immeasurable	×
		T303	40	168	−5	18.0	△
		S728	40	168	−10	7.6	△
	Silicic acid (saturated aqueous solution)	A727	40	168	−1	3.1	◎
		T303	40	168	−10	35.6	×
		T945	40	168	−29	47.1	×
		S728	40	168	3	0.9	◎
		F585	40	168	0	1.3	◎
	85% phosphoric acid solution	A727	40	168	−1	0.5	◎
		T303	40	168	0	−0.2	◎
		T945	40	168	−28	49.6	×
		S728	40	168	1	0.3	◎
		F585	40	168	0	0.0	◎
Organic acids (see note)	Glacial acetic acid	A727	40	168	—	32.6	×
		T303	40	168	—	166.0	×
		S728	40	168	—	19.0	△
	10% acetic acid solution	A727	40	168	−13	122.0	×
		T303	40	168	−10	50.5	×
		S728	40	168	−1	4.7	◎
		F585	40	168	−36	168.5	×
		31BF	—	—	—	—	◎
	40% acetic acid solution	A727	40	168	−11	72.0	×
		T303	40	168	−10	61.4	×
		S728	40	168	−1	7.7	×
		F585	40	168	−31	217.9	×
		31BF	—	—	—	—	◎
	70% acetic acid solution	A727	40	168	—	81.0	×
		T303	40	168	—	64.2	×
		S728	40	168	—	16.8	×
		F585	40	168	−35	205.4	×
		31BF	—	—	—	—	◎
	30% methonoic acid solution	A727	40	168	−12	114.0	×
		T303	40	168	−10	53.2	×
		S728	40	168	−1	9.3	△
		F585	40	168	−33	124.8	×
	30% mono-chloroacetic acid solution	A727	40	168	−11	25.2	×
		T303	40	168	−6	42.5	×
		S728	40	168	−4	29.3	△
		F585	40	168	−30	136.1	×
	Oleic acid	A727	40	168	−3	22.4	△
		T303	40	168	−4	15.8	△
		S728	40	168	0	14.8	○
	Oxalic acid	A727	40	168	2	1.9	◎
		T303	40	168	−9	30.0	×
		S728	40	168	−1	0.5	◎
		F585	40	168	−2	1.2	◎
	Maleic acid	A727	40	168	−10	90.3	×
		T303	40	168	−10	41.7	×
		S728	40	168	−3	11.2	○
		F585	40	168	−7	8.8	○
	Tannic acid (saturated solution)	A727	40	168	3	3.6	◎
		T303	40	168	−2	43.9	×
		S728	40	168	5	0.6	○
	Gallic acid	A727	40	168	−7	17.5	△
		T303	40	168	−18	48.9	×

Chemical Resistance Data

Note: Please refer to page 62 when using the product.

	Sealing Fluid	NOK Lip Material	Test Temperature (°C)	Test Duration (h)	Hardness Change (Durometer A) (points)	Volume Change (%)	Resistance Ratinaerial
Organic acids (see note)	Gallic acid	S728	40	168	−3	1.1	◎
		F585	40	168	−1	1.0	◎
Alkalis (see note)	10% ammonia aqueous solution	A727	40	168	−3	5.9	○
		T303	40	168	−16	86.2	×
		S728	40	168	9	1.3	○
	28% ammonia aqueous solution	A727	40	168	−5	6.1	○
		T303	40	168	−29	118.0	×
		S728	40	168	3	3.0	○
	10% sodium hydroxide solution (saturated solution)	A727	40	168	3	0.5	◎
		T303	40	168	−10	1.5	△
		S728	40	168	−3	−7.1	×
		F585	40	168	−1	0.5	○
	40% sodium hydroxide solution (saturated solution)	A727	40	168	1	−0.9	◎
		T303	40	168	−12	18.9	×
		S728	40	168	−3	−10.6	×
		F585	40	168	−1	−0.1	○
	10% potassium hydroxide solution (saturated solution)	A727	40	168	−1	0.3	◎
		T303	40	168	−15	31.5	×
		S728	40	168	−1	−10.0	×
		F585	40	168	−1	0.5	○
	40% potassium hydroxide solution (saturated solution)	A727	40	168	−1	0.4	◎
		T303	40	168	Immeasurable	Immeasurable	×
		S728	40	168	3	−3.3	○
		F585	40	168	−1	9.5	△
	Aluminum hydroxide (saturated solution)	A727	40	168	−1	2.3	◎
		T303	40	168	−7	38.5	×
		S728	40	168	4	1.0	◎
		F585	40	168	−2	1.2	◎
	Barium hydroxide (saturated solution)	A727	40	168	−1	1.3	◎
		T303	40	168	−5	16.2	×
		S728	40	168	2	−0.6	◎
		F585	40	168	−1	0.9	◎
	Calcium hydroxide (saturated solution)	A727	40	168	1	1.9	◎
		T303	40	168	−4	30.2	×
		S728	40	168	5	1.1	○
		F585	40	168	−2	1.0	◎
	Magnesium hydroxide (saturated solution)	A727	40	168	1	1.9	◎
		T303	40	168	−5	39.5	×
		S728	40	168	3	2.1	◎
		F585	40	168	−2	1.1	◎
Inorganic salts (see note)	Cupric chloride (saturated solution)	A727	40	168	−2	14.0	○
		T303	40	168	5	4.1	○
		T945	40	168	−9	10.5	△
		S728	40	168	6	0.1	○
		F585	40	168	−2	0.4	◎
	Sodium chloride (saturated solution)	A727	40	168	1	0.0	◎
		T303	40	168	5	2.9	○
		T945	40	168	−5	1.7	○
		S728	40	168	−1	0.4	◎
		F585	40	168	−1	0.2	◎
	Barium chloride (saturated solution)	A727	40	168	0	0.0	◎
		T303	40	168	−1	6.0	○
		T945	40	168	−7	4.2	○
		S728	40	168	2	−1.1	◎
		F585	40	168	−1	0.4	◎
	Magnesium chloride (saturated solution)	A727	40	168	0	1.0	◎
		T303	40	168	0	7.1	○
		T945	40	168	−7	2.6	○
		S728	40	168	2	−0.3	◎
		F585	40	168	−1	0.4	◎
	Potassium Chlorate (saturated solution)	A727	40	168	1	1.6	◎
		T303	40	168	4	12.7	△
		S728	40	168	1	−0.1	◎
	Potassium Permanganate (saturated solution)	A727	40	168	Immeasurable	Immeasurable	×
		T303	40	168	−10	46.3	×
		S728	40	168	2	−0.2	◎
	Potassium chromate (saturated solution)	A727	40	168	−1	1.0	◎
		T303	40	168	−2	6.9	○
		S728	40	168	2	−0.3	◎
	Sodium chromate (saturated solution)	A727	40	168	−5	0.5	○
		T303	40	168	−5	4.6	○
		S728	40	168	−1	−0.4	◎

Chemical Resistance Data

Note: Please refer to page 62 when using the product.

	Sealing Fluid	NOK Lip Material	Test Temperature (°C)	Test Duration (h)	Hardness Change (Durometer A) (points)	Volume Change (%)	Resistance Ratinaerial
Inorganic salts (see note)	Lead acetate (saturated solution)	A727	40	168	−10	20.6	×
		T303	40	168	−7	12.4	△
		S728	40	168	−3	1.4	◎
	Ammonium bicarbonate (saturated solution)	A727	40	168	−6	1.0	○
		T303	40	168	−13	22.2	×
		T945	40	168	−16	15.5	×
		S728	40	168	−1	5.0	◎
		F585	40	168	−3	3.6	◎
	Ammonium nitrate (saturated solution)	A727	40	168	0	−0.3	◎
		T303	40	168	0	2.1	◎
		T945	40	168	−4	1.4	○
		S728	40	168	2	−0.2	◎
		F585	40	168	−1	0.2	◎
	Silver nitrate (saturated solution)	A727	40	168	−60	Immeasurable	×
		T303	40	168	−8	7.6	△
		S728	40	168	−3	0.7	◎
	Lead nitrate (saturated solution)	A727	40	168	−4	5.5	○
		T303	40	168	−7	14.4	△
		S728	40	168	−1	0.5	◎
	Sodium nitrate (saturated solution)	A727	40	168	−5	0.5	○
		T303	40	168	−3	3.7	◎
		T945	40	168	−5	2.0	○
		S728	40	168	−1	0.2	◎
		F585	40	168	−1	0.2	◎
	Ammonium carbonate (saturated solution)	A727	40	168	4	3.0	◎
		T303	40	168	−14	57.4	×
		S728	40	168	8	4.1	○
		F585	40	168	−2	3.7	◎
	Potassium carbonate (saturated solution)	A727	40	168	−2	0.9	◎
		T303	40	168	0	8.8	○
		T945	40	168	−2	0.9	○
		S728	40	168	−1	−0.4	◎
		F585	40	168	0	0.0	◎
	Sodium nitrite (saturated solution)	A727	40	168	−1	0.6	◎
		T303	40	168	−4	3.5	○
		T945	40	168	−4	1.4	○
		S728	40	168	2	0.3	◎
		F585	40	168	−1	0.0	◎
	Sodium sulfite (saturated solution)	A727	40	168	−2	0.5	◎
		T303	40	168	2	4.4	○
		T945	40	168	−4	1.4	○
		S728	40	168	2	0.2	◎
		F585	40	168	−2	0.2	◎
	Ammonium chloride (saturated solution)	A727	40	168	1	0.7	◎
		T303	40	168	−2	5.1	○
		T945	40	168	−6	2.4	○
		S728	40	168	6	0.1	○
		F585	40	168	−1	0.3	◎
	Zinc chloride (saturated solution)	A727	40	168	−1	12.8	○
		T303	40	168	10	6.0	×
		S728	40	168	6	−0.5	○
	Potassium chloride (saturated solution)	A727	40	168	0	0.0	◎
		T303	40	168	−2	4.6	◎
		T945	40	168	−6	3.2	○
		S728	40	168	1	1.5	◎
		F585	40	168	−1	0.3	◎
	Calcium chloride (saturated solution)	A727	40	168	−1	−0.5	◎
		T303	40	168	1	0.5	◎
		T945	40	168	−3	0.4	○
		S728	40	168	2	−0.1	◎
		F585	40	168	−1	−0.1	◎
	Stannic chloride	A727	40	168	−6	22.6	×
		T303	40	168	−8	13.9	△
		S728	40	168	−1	1.5	◎
	Mercuric chloride (saturated solution)	A727	40	168	7	27.4	×
		T303	40	168	−16	44.7	×
		S728	40	168	−1	2.8	◎
	Ferric chloride (saturated solution)	A727	40	168	−6	41.0	×
		T303	40	168	−5	41.6	×
		S728	40	168	5	−0.2	○
	Sodium carbonate (saturated solution)	A727	40	168	−1	0.2	◎
		T303	40	168	−10	7.3	△
		T945	40	168	−7	2.5	○

Chemical Resistance Data

Note: Please refer to page 62 when using the product.

	Sealing Fluid	NOK Lip Material	Test Temperature (°C)	Test Duration (h)	Hardness Change (Durometer A) (points)	Volume Change (%)	Resistance Ratinaerial
Inorganic salts (see note)	Sodium carbonate (saturated solution)	S728	40	168	0	−0.7	◎
		F585	40	168	−2	0.2	◎
	Alum (potassium alum) (saturated solution)	A727	40	168	−2	2.3	◎
		T303	40	168	−10	22.9	×
		T945	40	168	−26	26.0	×
		S728	40	168	5	0.0	○
		F585	40	168	−2	1.8	◎
	Potassium iodide (saturated solution)	A727	40	168	−1	1.0	◎
		T303	40	168	−2	−3.5	◎
		S728	40	168	1	0.8	◎
	Sodium sulfide (saturated solution)	A727	40	168	−1	0.0	◎
		T303	40	168	−18	Immeasurable	×
		S728	40	168	2	−1.5	◎
	Zinc sulfate (saturated solution)	A727	40	168	0	1.1	◎
		T303	40	168	−1	9.8	○
		S728	40	168	2	−0.3	◎
	Ammonium sulfate (saturated solution)	A727	40	168	−8	−0.3	△
		T303	40	168	8	2.7	△
		T945	40	168	−5	2.2	○
		S728	40	168	4	0.8	◎
		F585	40	168	−1	0.2	◎
	Potassium sulfate (saturated solution)	A727	40	168	7	1.9	○
		T303	40	168	−10	9.7	△
		T945	40	168	−15	10.5	×
		S728	40	168	2	0.2	◎
		F585	40	168	−1	0.7	◎
	Calcium sulfate (saturated solution) (gypsum)	A727	40	168	−1	2.5	◎
		T303	40	168	8	39.8	×
		S728	40	168	4	0.7	○
		F585	40	168	−2	1.0	◎
	Ferrous sulfate (saturated solution)	A727	40	168	5	1.7	○
		T303	40	168	−5	12.0	△
		T945	40	168	−17	13.5	×
		S728	40	168	−1	2.1	◎
		F585	40	168	−1	0.7	◎
	Ferric sulfate (saturated solution)	A727	40	168	−2	2.5	◎
		T303	40	168	−13	5.9	×
		S728	40	168	−5	−0.4	◎
	Copper sulfate (saturated solution)	A727	40	168	−3	2.3	○
		T303	40	168	−16	23.1	×
		T945	40	168	−18	15.3	×
		S728	40	168	−5	0.3	◎
		F585	40	168	−1	0.8	◎
	Sodium sulfate (saturated solution)	A727	40	168	5	1.0	○
		T303	40	168	−7	12.4	△
		T945	40	168	−8	4.9	○
		S728	40	168	2	0.1	◎
		F585	40	168	−1	0.6	◎
	Nickel sulfate (saturated solution)	A727	40	168	—	0.6	◎
		T303	40	168	—	16.7	△
		T945	40	168	−10	5.6	△
		S728	40	168	—	30.0	×
		F585	40	168	−2	0.4	◎
	Magnesium sulfate (saturated solution)	A727	40	168	—	1.3	◎
		T303	40	168	—	17.8	△
		T945	40	168	−15	10.0	×
		S728	40	168	—	0.9	◎
		F585	40	168	−2	0.7	◎
	Disodium hydrogenphosphate	A727	40	168	−3	1.5	◎
		T303	40	168	−9	12.4	△
		T945	40	168	−7	4.1	○
		S728	40	168	1	0.0	◎
		F585	40	168	−1	0.2	◎
Alcohols	Methyl alcohols	A727	40	168	−8	4.8	○
		T303	40	168	−32	46.2	×
		S728	40	168	−3	2.0	◎
		F585	40	168	−35	117.0	×
	Ethyl alcohols	A727	40	168	−10	6.6	○
		T303	40	168	−29	50.6	×
		S728	40	168	−8	12.6	○
		F585	40	168	−8	4.9	○
	Isopropyl alcohols	A727	40	168	−8	7.4	○
		T303	40	168	−18	57.7	×

Chemical Resistance Data

	Sealing Fluid	NOK Lip Material	Test Temperature (°C)	Test Duration (h)	Hardness Change (Durometer A) (points)	Volume Change (%)	Resistance Ratinaerial
Alcohols	Isopropyl alcohols	S728	40	168	−10	11.4	△
		F585	40	168	−5	3.1	◎
	Butyl alcohols	A727	40	168	−18	12.9	△
		T303	40	168	−12	58.0	×
		S728	40	168	−12	20.2	○
		F585	40	168	−2	1.3	◎
	Isoamyl alcohols	A727	40	168	−4	−0.3	◎
		T303	40	168	−23	47.3	×
		S728	40	168	−12	20.8	△
		F585	40	168	−3	2.8	◎
	Ethylene glycol	A727	40	168	−4	−1.1	◎
		T303	40	168	−20	18.1	×
		T945	40	168	−14	14.9	△
		S728	40	168	0	0.9	◎
		F585	40	168	−1	0.2	◎
	Glycerin	A727	40	168	0	0.5	◎
		T303	40	168	−5	2.9	○
		T945	40	168	−4	2.8	○
		S728	40	168	0	0.5	◎
		F585	40	168	−1	0.1	◎
Aldehydes/ketones	Formalin	A727	40	168	−8	7.1	○
		T303	40	168	−16	41.3	×
		S728	40	168	−3	1.0	◎
	Acetaldehyde	A727	40	168	−17	66.1	×
		T303	40	168	−31	58.1	×
		S728	40	168	−8	5.0	○
	Methyl ethyl ketone	A727	40	168	−24	102.0	×
		T303	40	168	−27	139.0	×
		S728	40	168	−12	20.0	△
Esters	Methyl acetate	A727	40	168	−29	59.3	×
		T303	40	168	−39	210.0	×
		T945	40	168	−24	129.0	×
		S728	40	168	−9	13.3	○
	Ethyl acetate	A727	40	168	−19	81.1	×
		T303	40	168	−25	102.0	×
		T945	40	168	−27	126.5	×
		S728	40	168	−12	21.5	△
	Butyl acetate	A727	40	168	−26	123.0	×
		T303	40	168	−32	129.0	×
		T945	40	168	−31	123.6	×
		S728	40	168	−23	105.0	×
		31BF	—	—	—	—	◎
	Isoamyl acetate	A727	40	168	−19	79.8	×
		T303	40	168	−27	165.0	×
		T945	40	168	−26	117.4	×
		S728	40	168	−19	91.9	×
		31BF	—	—	—	—	◎
	Dibutyl phthalate	A727	40	168	−24	139.0	×
		T303	40	168	−29	154.0	×
		T945	40	168	−24	107.6	×
		S728	40	168	−1	3.4	◎
Hydrocarbons	Isooctane	A727	40	168	−7	2.6	○
		T303	40	168	−8	8.1	△
		T945	40	168	−9	12.1	△
		S728	40	168	−16	77.7	×
		F585	40	168	0	0.3	◎
	Liquid paraffin	A727	40	168	−1	0.7	◎
		T303	40	168	−5	2.7	○
		T945	40	168	−2	−0.3	◎
		S728	40	168	0	4.6	◎
		F585	40	168	−1	0.1	◎
	Kerosene	A727	40	168	−9	7.6	△
		T303	40	168	−5	8.9	△
		T945	40	168	−12	16.2	×
		S728	40	168	−22	107.0	×
		F585	40	168	−2	−0.8	◎
	1.2-dichloroethane	A727	40	168	—	243.0	×
		T303	40	168	—	310.0	×
		S728	40	168	—	36.5	×
		31BF	—	—	—	—	◎
	Trichlene (trichloroethylene)	A727	40	168	−21	132.0	×
		T303	40	168	−33	222.0	×

Chemical Resistance Data

	Sealing Fluid	NOK Lip Material	Test Temperature (°C)	Test Duration (h)	Hardness Change (Durometer A) (points)	Volume Change (%)	Resistance Ratinaerial
Hydrocarbons / Halogenated hydrocarbons	Trichlene (trichloroethylene)	S728	40	168	−19	98.5	×
		31BF	—	—	—	—	◎
	1.1.1-trichloroethane	A727	60	48	−16	134.0	×
		S728	60	48	−25	46.3	×
		31BF	—	—	—	—	◎
	Benzene	A727	40	168	−29	160.0	×
		T303	40	168	−27	277.0	×
		S728	40	168	−22	120.0	×
		31BF	—	—	—	—	◎
	Toluene	A727	40	168	−23	137.0	×
		T303	40	168	−37	241.0	×
		S728	40	168	−22	130.0	×
		31BF	—	—	—	—	◎
	Methaxylene	A727	40	168	−14	84.8	×
		T303	40	168	−25	157.0	×
		S728	40	168	−16	80.0	×
		31BF	—	—	—	—	◎
	Ethylbenzene	A727	40	168	−21	46.1	×
		T303	40	168	−30	114.0	×
		S728	40	168	−19	66.7	×
		31BF	—	—	—	—	◎
	Styrene	A727	40	168	−27	176.0	×
		T303	40	168	−39	253.0	×
		S728	40	168	−22	177.0	×
		31BF	—	—	—	—	◎
	Monochlorobenzene	A727	40	168	−23	213.0	×
		T303	40	168	−39	278.0	×
		S728	40	168	—	120.0	×
		31BF	—	—	—	—	◎
	Trichlorobenzene	A727	40	168	−16	165.0	×
		T303	40	168	−31	220.0	×
		S728	40	168	−17	25.3	×
		31BF	—	—	—	—	◎
	Bromobenzene	A727	40	168	−24	206.0	×
		T303	40	168	−32	250.0	×
		S728	40	168	−17	57.7	×
		31BF	—	—	—	—	◎
Miscellaneous	Dioxane	A727	40	168	−28	164.0	×
		T303	40	168	−24	168.0	×
		S728	40	168	−6	8.3	○
	Phenyl ether (diphynyloxide)	A727	40	168	−15	15.1	×
		T303	40	168	−25	73.5	×
		S728	40	168	−7	10.0	○
	Phenol	A727	40	168	−35	113.0	×
		T303	40	168	−32	150.0	×
		S728	40	168	−5	4.0	○
	Cresol	A727	40	168	Immeasurable	Immeasurable	×
		T303	40	168	Immeasurable	Immeasurable	×
		S728	40	168	0	0.8	◎
		F585	40	168	−2	1.5	◎
	Aniline	A727	40	168	−29	217.0	×
		T303	40	168	−46	290.0	×
		S728	40	168	0	2.3	◎
	Nitrobenzene	A727	40	168	−25	199.0	×
		T303	40	168	−42	269.0	×
		S728	40	168	0	4.0	◎
	Urea (saturated solution)	A727	40	168	2	−0.8	◎
		T303	40	168	−9	9.2	△
		T945	40	168	−20	14.8	×
		S728	40	168	1	0.3	◎
		F585	40	168	−2	0.5	◎
	Carbon disulfide	A727	40	168	−20	47.8	×
		T303	40	168	−11	47.7	×
		S728	40	168	0	3.7	◎
	Hydrogen peroxide water	A727	40	168	−3	10.5	△
		T303	40	168	−53	78.2	×
		S728	40	168	−1	1.7	◎
	Chlorine water	A727	40	168	−4	3.1	○
		T303	40	168	−8	54.3	×
		S728	40	168	−3	19.5	△
	Urea water	A727	40	168	3	21.7	△
		T303	40	168	−40	394.0	×
		S728	40	168	1	22.6	△

12. APPENDED CHART

Shaft Tolerances and Dimensions (JIS B 0401)

Unit: 0.001mm

Classification of nominal dimension (mm)	IT 5	m 5	k 5	j 5	h 5	IT 6	r 6	p 6	n 6	m 6	k 6	j 6	h 6	g 6	f 6	IT 7	s 7	r 7	p 7	n 7	m 7	k 7	j 7	h 7	g 7	f 7	e 7	IT 8	h 8	f 8	e 8	d 8	IT 9	h 9	e 9	d 9	c 9	b 9	IT 10	h 10	IT 11	h 11
		Upper tolerance / Lower tolerance					Upper tolerance / Lower tolerance										Upper tolerance / Lower tolerance											Upper tolerance / Lower tolerance					Upper tolerance / Lower tolerance						Upper tolerance / Lower tolerance		Upper tolerance / Lower tolerance
1 - 3	4	+6 +2	+4 +0	+4 −1	0 −4	6	+16 +10	+12 +6	+10 +4	+8 +2	+6 0	+6 −1	0 −6	−2 −8	−6 −12	10	+24 +15	+21 +12	+18 +9	+15 +6	— —	— —	+7 −2	0 −10	−3 −12	−6 −16	−14 −24	14	0 −14	−6 −20	−14 −28	−20 −34	25	0 −25	−14 −39	−20 −45	−60 −85	−140 −165	40	0 −40	60	0 −60
3 - 6	5	+9 +4	+6 +1	+4 −1	0 −5	8	+23 +15	+20 +12	+16 +8	+12 +4	+9 +1	+7 −1	0 −8	−4 −12	−10 −18	12	+31 +19	+27 +15	+24 +12	+20 +8	— —	— —	+9 −3	0 −12	−4 −16	−10 −22	−20 −32	18	0 −18	−10 −28	−20 −38	−30 −48	30	0 −30	−20 −50	−30 −60	−70 −100	−140 −170	48	0 −48	75	0 −75
6 - 10	6	+12 +6	+7 +1	+4 −2	0 −6	9	+28 +19	+24 +15	+19 +10	+15 +6	+10 +1	+7 −2	0 −9	−5 −14	−13 −22	15	+38 +23	+34 +19	+30 +15	+25 +10	+21 +6	+16 +1	+10 −5	0 −15	−5 −20	−13 −28	−25 −40	22	0 −22	−13 −35	−25 −47	−40 −62	36	0 −36	−25 −61	−40 −76	−80 −116	−150 −186	58	0 −58	90	0 −90
10 - 14 14 - 18	8	+15 +7	+9 +1	+5 −3	0 −8	11	+34 +23	+29 +18	+23 +12	+18 +7	+12 +1	+8 −3	0 −11	−6 −17	−16 −27	18	+46 +28	+41 +23	+36 +18	+30 +12	+25 +7	+19 +1	+12 −6	0 −18	−6 −24	−16 −34	−32 −50	27	0 −27	−16 −43	−32 −59	−50 −77	43	0 −43	−32 −75	−50 −93	−95 −138	−150 −193	70	0 −70	110	0 −110
18 - 24 24 - 30	9	+17 +8	+11 +2	+5 −4	0 −9	13	+41 +28	+35 +22	+28 +15	+21 +8	+15 +2	+9 −4	0 −13	−7 −20	−20 −33	21	+56 +35	+49 +28	+43 +22	+36 +15	+29 +8	+23 +2	+13 −8	0 −21	−7 −28	−20 −41	−40 −61	33	0 −33	−20 −53	−40 −73	−65 −98	52	0 −52	−40 −92	−65 −117	−110 −162	−160 −212	84	0 −84	130	0 −130
30 - 40	11	+20 +9	+13 +2	+6 −5	0 −11	16	+50 +34	+42 +26	+33 +17	+25 +9	+18 +2	+11 −5	0 −16	−9 −25	−25 −41	25	+68 +43	+59 +34	+51 +26	+42 +17	+34 +9	+27 +2	+15 −10	0 −25	−9 −34	−25 −50	−50 −75	39	0 −39	−25 −64	−50 −89	−80 −119	62	0 −62	−50 −112	−80 −142	−120 −182	−170 −232	100	0 −100	160	0 −160
40 - 50																																					−130 −192	−180 −242				
50 - 65	13	+24 +11	+15 +2	+6 −7	0 −13	19	+60 +41	+51	+39	+30	+21	+12	0	−10	−30	30	+83 +53	+71 +41	+62	+50	+41	+32	+18	0	−10	−30	−60	46	0	−30	−60	−100	74	0	−60	−100	−140 −214	−190 −264	120	0 −120	190	0 −190
65 - 80							+62 +43	+32	+20	+11	+2	−7	−19	−29	−49		+89 +59	+73 +43	+32	+20	+11	+2	−12	−30	−40	−60	−90		−46	−76	−106	−146		−74	−134	−174	−150 −224	−200 −274				
80 - 100	15	+28 +13	+18 +3	+6 −9	0 −15	22	+73 +51	+59	+45	+35	+25	+13	0	−12	−36	35	+106 +71	+86 +51	+72	+58	+48	+38	+20	0	−12	−36	−72	54	0	−36	−72	−120	87	0	−72	−120	−170 −257	−220 −307	140	0 −140	220	0 −220
100 - 120							+76 +54	+37	+23	+13	+3	−9	−22	−34	−58		+114 +79	+89 +54	+37	+23	+13	+3	−15	−35	−47	−71	−107		−54	−90	−126	−174		−87	−159	−207	−180 −267	−240 −327				
120 - 140	18	+33 +15	+21 +3	+7 −11	0 −18	25	+88 +63									40	+132 +92	+103 +63										63					100				−200 −300	−260 −360	160	0 −160	250	0 −250
140 - 160							+90 +65	+68 +43	+52 +27	+40 +15	+28 +3	+14 −11	0 −25	−14 −39	−43 −68		+140 +100	+105 +65	+83 +43	+67 +27	+55 +15	+43 +3	+22 −18	0 −40	−14 −54	−43 −83	−85 −125		0 −63	−43 −106	−85 −148	−145 −208		0 −100	−85 −185	−145 −245	−210 −310	−280 −380				
160 - 180							+93 +68										+148 +108	+108 +68																			−230 −330	−310 −410				
180 - 200	20	+37 +17	+24 +4	+7 −13	0 −20	29	+106 +77									46	+168 +122	+123 +77										72					115				−240 −355	−340 −455	185	0 −185	290	0 −290
200 - 225							+109 +80	+79 +50	+60 +31	+46 +17	+33 +4	+16 −13	0 −29	−15 −44	−50 −79		+176 +130	+126 +80	+96 +50	+77 +31	+63 +17	+50 +4	+25 −21	0 −46	−15 −61	−50 −96	−100 −146		0 −72	−50 −122	−100 −172	−170 −242		0 −115	−100 −215	−170 −285	−260 −375	−380 −495				
225 - 250							+113 +84										+188 +140	+130 +84																			−280 −395	−420 −535				
250 - 280	23	+43 +20	+27 +4	+7 −16	0 −23	32	+126 +94	+88	+66	+52	+36	+16	0	−17	−56	52	+210 +158	+146 +94	+108	+86	+72	+56	+26	0	−17	−56	−110	81	0	−56	−110	−190	130	0	−110	−190	−300 −430	−480 −610	210	0 −210	320	0 −320
280 - 315							+130 +98	+56	+34	+20	+4	−16	−32	−49	−88		+222 +170	+150 +98	+56	+34	+20	+4	−26	−52	−69	−108	−162		−81	−137	−191	−271		−130	−240	−320	−330 −460	−540 −670				
315 - 355	25	+46 +21	+29 +4	+7 −18	0 −25	36	+144 +108	+98	+73	+57	+40	+18	0	−18	−62	57	+247 +190	+165 +108	+119	+94	+78	+61	+29	0	−18	−62	−125	89	0	−62	−125	−210	140	0	−125	−210	−360 −500	−600 −740	230	0 −230	360	0 −360
355 - 400							+150 +114	+62	+37	+21	+4	−18	−36	−54	−98		+265 +208	+171 +114	+62	+37	+21	+4	−28	−57	−75	−119	−182		−89	−151	−214	−299		−140	−265	−350	−400 −540	−680 −820				
400 - 450	27	+50 +23	+32 +5	+7 −20	0 −27	40	+166 +126	+108	+80	+63	+45	+20	0	−20	−68	63	+295 +232	+189 +126	+131	+103	+86	+68	+31	0	−20	−68	−135	97	0	−68	−135	−230	155	0	−135	−230	−440 −595	−760 −915	250	0 −250	400	0 −400
450 - 500							+172 +132	+68	+40	+23	+4	−20	−40	−60	−108		+315 +252	+195 +132	+68	+40	+23	+5	−32	−63	−83	−131	−198		−97	−165	−232	−327		−155	−290	−385	−480 −635	−840 −995				

Hole Tolerances and Dimensions (JIS B 0401)

Unit: 0.001mm

Classification of nominal dimension (mm)	IT 6	M 6	K 6	J 6	H 6	G 6	F 6	IT 7	U 7	T 7	S 7	R 7	P 7	N 7	M 7	K 7	J 7	H 7	G 7	F 7	E 7	IT 8	H 8	F 8	E 8	D 8	IT 9	H 9	E 9	D 9	C 9	IT 10	H 10	D 10	C 10	B 10	IT 12	H 12
		Upper tolerance Lower tolerance							Upper tolerance Lower tolerance														Upper tolerance Lower tolerance					Upper tolerance Lower tolerance					Upper tolerance Lower tolerance					Upper tolerance Lower tolerance
1 - 3	6	−2 −8	+0 −6	+2 −4	+6 0	+8 +2	+12 +6	10	−18 −28	—	−14 −24	−10 −20	−6 −16	−4 −14	−2 −12	0 −10	+3 −6	+10 0	+12 +2	+16 +6	+24 +14	14	+14 0	+20 +6	+28 +14	+34 +20	25	+25 0	+39 +14	+45 +20	+85 +60	40	+40 0	+60 +20	+100 +60	+180 +140	100	+100 0
3 - 6	8	−1 −9	+2 −6	+4 −4	+8 0	+12 +4	+18 +10	12	−19 −31	—	−15 −27	−11 −23	−8 −20	−4 −16	0 −12	+3 −9	+5 −7	+12 0	+16 +4	+22 +10	+32 +20	18	+18 0	+28 +10	+38 +20	+48 +30	30	+30 0	+50 +20	+60 +30	+100 +70	48	+48 0	+78 +30	+118 +70	+188 +140	120	+120 0
6 - 10	9	−3 −12	+2 −7	+5 −4	+9 0	+14 +5	+22 +13	15	−22 −37	—	−17 −32	−13 −28	−9 −24	−4 −19	0 −15	+5 −10	+8 −7	+15 0	+20 +5	+28 +13	+40 +25	22	+22 0	+35 +13	+47 +25	+62 +40	36	+36 0	+61 +25	+76 +40	+116 +80	58	+58 0	+98 +40	+138 +80	+208 +150	150	+150 0
10 - 14 14 - 18	11	−4 −15	+2 −9	+6 −5	+11 0	+17 +6	+27 +16	18	−26 −44	—	−21 −39	−16 −34	−11 −29	−5 −23	0 −18	+6 −12	+10 −8	+18 0	+24 +6	+34 +16	+50 +32	27	+27 0	+43 +16	+59 +32	+77 +50	43	+43 0	+75 +32	+93 +50	+138 +95	70	+70 0	+120 +50	+165 +95	+220 +150	180	+180 0
18 - 24	13	−4 −17	+2 −11	+8 −5	+13 0	+20 +7	+33 +20	21	−33 −54	— —	−27 −48	−20 −41	−14 −35	−7 −28	0 −21	+6 −15	+12 −9	+21 0	+28 +7	+41 +20	+61 +40	33	+33 0	+53 +20	+73 +40	+98 +65	52	+52 0	+92 +40	+117 +65	+162 +110	84	+84 0	+149 +65	+194 +110	+244 +160	210	+210 0
24 - 30									−40 −61	−33 −54																												
30 - 40	16	−4 −20	+3 −13	+10 −6	+16 0	+25 +9	+41 +25	25	−51 −76	−39 −64	−34 −59	−25 −50	−17 −42	−8 −33	0 −25	+7 −18	+14 −11	+25 0	+34 +9	+50 +25	+75 +50	39	+39 0	+64 +25	+89 +50	+119 +80	62	+62 0	+112 +50	+142 +80	+182 +120	100	+100 0	+180 +80	+220 +120	+270 +170	250	+250 0
40 - 50									−61 −86	−45 −70																				+192 +130				+230 +130	+280 +180		
50 - 65	19	−5 −24	+4 −15	+13 −6	+19 0	+29 +10	+49 +30	30	−76 −106	−55 −85	−42 −72	−30 −60	−21 −51	−9 −39	0 −30	+9 −21	+18 −12	+30 0	+40 +10	+60 +30	+90 +60	46	+46 0	+76 +30	+106 +60	+146 +100	74	+74 0	+134 +60	+174 +100	+214 +140	120	+120 0	+220 +146	+260 +140	+310 +190	300	+300 0
65 - 80									−91 −121	−64 −94	−48 −78	−32 −62																		+224 +150				+270 +150	+320 +200		
80 - 100	22	−6 −28	+4 −18	+16 −6	+22 0	+34 +12	+58 +36	35	−111 −146	−78 −113	−58 −93	−38 −73	−24 −59	−10 −45	0 −35	+10 −25	+22 −13	+35 0	+47 +12	+71 +36	+107 +72	54	+54 0	+90 +36	+126 +72	+174 +120	87	+87 0	+159 +72	+207 +120	+257 +170	140	+140 0	+260 +120	+310 +170	+360 +220	350	+350 0
100 - 120									−131 −166	−91 −126	−66 −101	−41 −76																		+267 +180				+320 +180	+380 +240		
120 - 140	25	−8 −33	+4 −21	+16 −7	+25 0	+39 +14	+68 +43	40	— —	−107 −147	−77 −117	−48 −88																		+300 +200				+360 +200	+420 +260		
140 - 160									— —	−119 −159	−85 −125	−50 −90	−28 −68	−12 −52	0 −40	+12 −28	+26 −14	+40 0	+54 +14	+83 +43	+125 +85	63	+63 0	+106 +43	+148 +85	+208 +145	100	+100 0	+185 +85	+245 +145	+310 +210	160	+160 0	+305 +145	+370 +210	+440 +280	400	+400 0
160 - 180									— —	−131 −171	−93 −133	−53 −93																		+330 +230				+390 +230	+470 +310		
180 - 200	29	−8 −37	+5 −24	+22 −7	+29 0	+44 +15	+79 +50	46	— —	— —	−105 −151	−60 −106																		+355 +240				+425 +240	+525 +340		
200 - 225									— —	— —	−113 −159	−63 −109	−33 −79	−14 −60	0 −46	+13 −33	+30 −16	+46 0	+61 +15	+96 +50	+146 +100	72	+72 0	+122 +50	+172 +100	+242 +170	115	+115 0	+215 +100	+285 +170	+375 +260	185	+185 0	+355 +170	+445 +260	+565 +380	460	+460 0
225 - 250									— —	— —	−123 −169	−67 −113																		+395 +280				+465 +280	+605 +420		
250 - 280	32	−9 −41	+5 −27	+25 −7	+32 0	+49 +17	+88 +56	52	— —	— —	— —	−74 −126	−36 −88	−14 −66	0 −52	+16 −36	+36 −16	+52 0	+69 +17	+108 +56	+162 +110	81	+81 0	+137 +56	+191 +110	+271 +190	130	+130 0	+240 +110	+320 +190	+430 +300	210	+210 0	+400 +190	+510 +300	+690 +480	520	+520 0
280 - 315									— —	— —	— —	−78 −130																		+460 +330				+540 +330	+750 +540		
315 - 355	36	−10 −46	+7 −29	+29 −7	+36 0	+54 +18	+98 +62	57	— —	— —	— —	−87 −144	−41 −98	−16 −73	0 −57	+17 −40	+39 −18	+57 0	+75 +18	+119 +62	+182 +125	89	+89 0	+151 +62	+214 +125	+299 +210	140	+140 0	+265 +125	+350 +210	+500 +360	230	+230 0	+440 +210	+590 +360	+830 +600	570	+570 0
355 - 400									— —	— —	— —	−93 −150																		+540 +400				+630 +400	+910 +680		
400 - 450	40	−10 −50	+8 −32	+33 −7	+40 0	+60 +20	+108 +68	63	— —	— —	— —	−103 −166	−45 −108	−17 −80	0 −63	+18 −45	+43 −20	+63 0	+83 +20	+131 +68	+198 +135	97	+97 0	+165 +68	+232 +135	+327 +230	155	+155 0	+290 +135	+385 +230	+595 +440	250	+250 0	+480 +230	+690 +440	+1010 +760	630	+630 0
450 - 500									— —	— —	— —	−109 −172																		+635 +480				+730 +480	+1090 +840		

Hole Tolerances and Dimensions (JIS B 0401)

Unit: 0.001mm

Basic Tolerances for Large Applications (JIS B 0401)

Unit: 0.001mm

Nominal Size Size Group (mm)		Shaft Tolerances	Bore Tolerances		
		h9	H7	H8	H12
Over	Up to	Upper tolerance Lower tolerance			
500	630	0 −175	+ 70 0	+110 0	+ 700 0
630	800	0 −200	+ 80 0	+125 0	+ 800 0
800	1000	0 −230	+ 90 0	+140 0	+ 900 0
1000	1250	0 −260	+105 0	+165 0	+1050 0
1250	1600	0 −310	+125 0	+195 0	+1250 0
1600	2000	0 −370	+150 0	+230 0	+1500 0
2000	2500	0 −440	+175 0	+280 0	+1750 0
2500	3150	0 −540	+210 0	+330 0	+2100 0

Conversion Table for SI Units

The enclosed sections show the SI unit conversions.

Force	N	dyn	kgf
	1	1×10^{5}	$1.019\ 72\times10^{-1}$
	1×10^{-5}	1	$1.019\ 72\times10^{-6}$
	9.806 65	9.80665×10^{5}	1

Viscosity	Pa·s	cp	P
	1	1×10^{3}	1×10
	1×10^{-3}	1	1×10^{-2}
	1×10^{-1}	1×10^{2}	1

Note: 1P=1dyn·s/cm^2=1g/cm·s, 1Pa·s=1N·s/m^2, 1cP=1mPa·s

Pressure	Pa	kPa	MPa	bar	kgf/cm^2	atm	mmH$_2$O	mmHg or Torr
	1	1×10^{-3}	1×10^{-6}	1×10^{-5}	$1.019\ 72\times10^{-5}$	$9.869\ 23\times10^{-6}$	$1.019\ 72\times10^{-1}$	$7.500\ 62\times10^{-3}$
	1×10^{3}	1	1×10^{-3}	1×10^{-2}	$1.019\ 72\times10^{-2}$	$9.869\ 23\times10^{-3}$	$1.019\ 72\times10^{2}$	7.500 62
	1×10^{6}	1×10^{3}	1	1×10	$1.019\ 72\times10$	9.869 23	$1.019\ 72\times10^{5}$	$7.500\ 62\times10^{3}$
	1×10^{5}	1×10^{2}	1×10^{-1}	1	1.019 72	$9.869\ 23\times10^{-1}$	$1.019\ 72\times10^{4}$	$7.500\ 62\times10^{2}$
	$9.806\ 65\times10^{4}$	$9.806\ 65\times10$	$9.806\ 65\times10^{-2}$	$9.806\ 65\times10^{-1}$	1	$9.678\ 41\times10^{-1}$	1×10^{4}	$7.355\ 59\times10^{2}$
	$1.013\ 25\times10^{5}$	$1.013\ 25\times10^{2}$	$1.013\ 25\times10^{-1}$	1.013 25	1.033 23	1	$1.033\ 23\times10^{4}$	$7.600\ 00\times10^{2}$
	9.806 65	$9.806\ 65\times10^{-3}$	$9.806\ 65\times10^{-6}$	$9.806\ 65\times10^{-5}$	1×10^{-4}	$9.678\ 41\times10^{-5}$	1	$7.355\ 59\times10^{-2}$
	$1.333\ 22\times10^{2}$	$1.333\ 22\times10^{-1}$	$1.333\ 22\times10^{-4}$	$1.333\ 22\times10^{-3}$	$1.359\ 51\times10^{-3}$	$1.315\ 79\times10^{-3}$	$1.359\ 51\times10$	1

Note: 1Pa=1N/m^2

Stress	Pa or N/m^2	MPa or N/m^2	kgf	kgf/cm^2
	1	1×10^{-6}	$1.019\ 72\times10^{-7}$	$1.019\ 72\times10^{-5}$
	1×10^{6}	1	$1.019\ 72\times10^{-1}$	$1.019\ 72\times10$
	$9.806\ 65\times10^{6}$	9.806 65	1	1×10^{2}
	$9.806\ 65\times10^{4}$	$9.806\ 65\times10^{-2}$	1×10^{-2}	1

Note: 1Pa=1N/m^2, 1MPa=1N/mm^2

Dynamic viscosity	m^2/s	cSt	St
	1	1×10^{6}	1×10^{4}
	1×10^{-6}	1	1×10^{2}
	1×10^{-4}	1×10^{2}	1

Note: 1St=1cm^2/s, 1cSt=1mm^2/S

Hardness Conversion Table

Approximate conversion value for Rockwell ASTM hardness C of steel					
Hardness by Rockwell C scale	Vickers hardness	Brinell hardness 300kg	Rockwell hardness	Shore hardness	Hardness by Rockwell C scale
		Standard ball	B scale Load 100kg Dia. of ball: 1/16 in.		
68	940	–	–	97	68
67	900	–	–	95	67
66	865	–	–	92	66
65	832	–	–	91	65
64	800	–	–	88	64
63	772	–	–	87	63
62	746	–	–	85	62
61	720	–	–	83	61
60	697	–	–	81	60
59	674	–	–	80	59
58	653	–	–	78	58
57	633	–	–	76	57
56	613	–	–	75	56
55	595	–	–	74	55
54	577	–	–	72	54
53	560	–	–	71	53
52	544	500	–	69	52
51	528	487	–	68	51
50	513	475	–	67	50
49	498	464	–	66	49
48	484	451	–	64	48
47	471	442	–	63	47
46	458	132	–	62	46
45	446	421	–	60	45
44	434	409	–	58	44
43	423	400	–	57	43
42	412	390	–	56	42
41	402	381	–	55	41
40	392	371	–	54	40
39	382	362	–	52	39
38	372	358	–	51	38
37	363	344	–	50	37
36	354	336	(109.0)	49	36
35	345	327	(108.5)	48	35
34	336	319	(108.0)	47	34
33	327	311	(107.5)	46	33
32	318	301	(107.0)	44	32
31	310	294	(106.0)	43	31
30	302	286	(105.5)	42	30
29	294	279	(104.5)	41	29
28	286	271	(104.0)	41	28
27	279	264	(103.0)	40	27
26	272	258	(102.5)	38	26
25	266	253	(101.5)	38	25
24	260	247	(101.0)	37	24
23	254	243	(100.0)	36	23
22	248	237	(99.0)	35	22
21	243	231	(98.5)	35	21
20	238	226	97.8	34	20
(18)	230	219	96.7	33	(18)
(16)	222	212	95.5	32	(16)
(14)	213	203	93.9	31	(14)
(12)	204	194	92.3	29	(12)
(10)	196	187	90.7	28	(10)
(8)	188	179	89.5	27	(8)
(6)	180	171	87.1	26	(6)
(4)	173	165	85.5	25	(4)
(2)	166	158	83.5	24	(2)
(0)	160	152	81.7	24	(0)

Surface Roughness vs Machining Methods

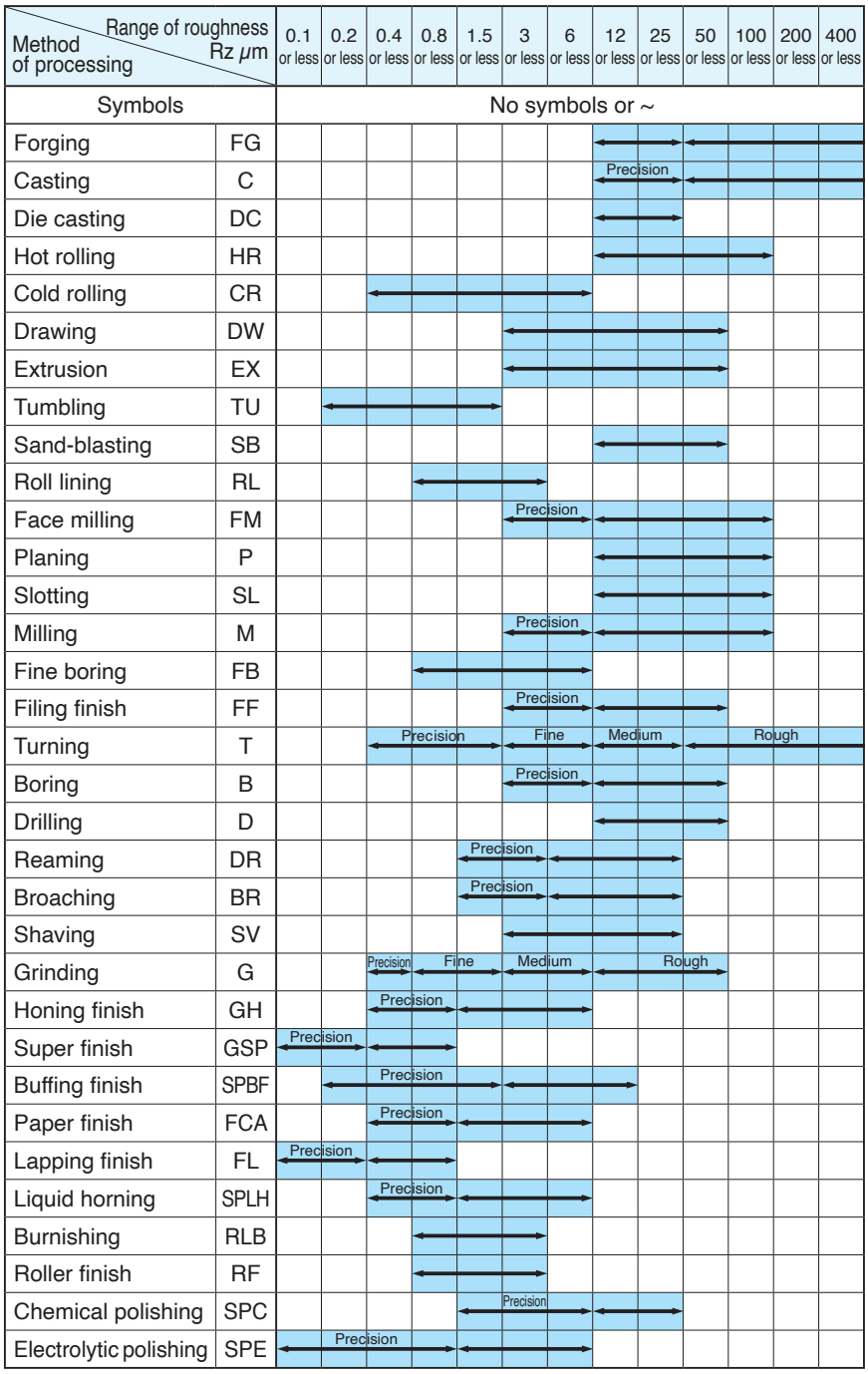

The notation of surface roughness on the catalog comply with JIS B 0601: 2001

Table of viscosity conversion

Seyboldt SUS (sec)	Red wood R (sec)	Engler E (sec)	Centi-stokes cSt
35	32.2	1.18	2.7
40	36.2	1.32	4.3
45	40.6	1.46	5.9
50	44.9	1.60	7.4
55	49.1	1.75	8.9
60	53.5	1.88	10.4
65	57.9	2.02	11.8
70	62.3	2.15	13.1
75	67.6	2.31	14.5
80	71.0	2.42	15.8
85	75.1	2.55	17.0
90	79.6	2.68	18.2
95	84.2	2.81	19.4
100	88.4	2.95	20.6
110	97.1	3.21	23.0
120	105.9	3.49	25.0
130	114.8	3.77	27.5
140	123.6	4.04	29.8
150	132.4	4.32	32.1
160	141.1	4.59	34.3
170	150.0	4.88	36.5
180	158.8	5.15	38.8
190	167.5	5.44	41.0
200	176.4	5.72	43.2
220	194	6.28	47.5
240	212	6.85	51.9
260	229	7.38	56.5
280	247	7.95	60.5
300	265	8.51	64.9
325	287	9.24	70.3
350	309	9.95	75.8
375	331	10.7	81.2
400	353	11.4	86.8
425	375	12.1	92.0
450	397	12.8	97.4

Seyboldt SUS (sec)	Red wood R (sec)	Engler E (sec)	Centi-stokes cSt
475	419	13.5	103
500	441	14.2	108
550	485	15.6	119
600	529	17.0	130
650	573	18.5	141
700	617	19.9	152
750	661	21.3	163
800	705	22.7	173
850	749	24.2	184
900	793	25.6	195
950	837	27.0	206
1000	882	28.4	217
1200	1058	34.1	260
1400	1234	39.8	302
1600	1411	45.5	347
1800	1587	51	390
2000	1763	57	433
2500	2204	71	542
3000	2646	85	650
3500	3087	99	758
4000	3526	114	867
4500	3967	128	974
5000	4408	142	1082
5500	4849	156	1150
6000	5290	170	1300
6500	5730	185	1400
7000	6171	199	1510
7500	6612	213	1630
8000	7053	227	1740
8500	7494	242	1850
9000	7943	256	1960
9500	8375	270	2070
10000	8816	284	2200

How to read the Table:
For example, when converting 38°C into °F, find out 38 from the 2nd row of the table (10th position from the top) at the center column and then read the figure in the column °F on the right side. You will thus find out 100,4°F.
To the contrary, you can convert 38°F into °C by reading the figure in the column °C on the left side and then you can know that it correspond to 33°C.

$$C=\frac{5}{9}(F-32) \qquad F=\frac{9}{5}C+32$$

Table of temperature conversion

°C ←	°F	°C →	°F
–73	–100	–148	
–62	– 80	–112	
–51	– 60	– 76	
–40	– 40	– 40	
–29	– 20	– 4	
–23.3	– 10	14	
–17.7	0	32	
–17.2	1	33.8	
–16.6	2	35.6	
–16.1	3	37.4	
–15.5	4	39.2	
–15.0	5	41.0	
–14.4	6	42.8	
–13.9	7	44.6	
–13.3	8	46.4	
–12.7	9	48.2	
–12.2	10	50.0	
–11.6	11	51.8	
–11.1	12	53.6	
–10.5	13	55.4	
–10.0	14	57.2	
– 9.4	15	59.0	
– 8.8	16	61.8	
– 8.3	17	63.6	
– 7.7	18	65.4	
– 7.2	19	67.2	
– 6.6	20	68.0	
– 6.1	21	69.8	
– 5.5	22	71.6	
– 5.0	23	73.4	
– 4.4	24	75.2	
– 3.9	25	77.0	
– 3.3	26	78.8	
– 2.8	27	80.6	
– 2.2	28	82.4	

°C ←	°F	°C →	°F
–1.6	29	84.2	
–1.1	30	86.0	
–0.6	31	87.8	
0	32	89.6	
0.5	33	91.4	
1.1	34	93.2	
1.6	35	95.0	
2.2	36	96.8	
2.7	37	98.6	
3.3	38	100.4	
3.8	39	102.2	
4.4	40	104.0	
4.9	41	105.8	
5.5	42	107.6	
6.0	43	109.4	
6.6	44	111.2	
7.1	45	113.0	
7.7	46	114.8	
8.2	47	116.6	
8.8	48	118.4	
9.3	49	120.2	
9.9	50	122.0	
10.4	51	123.8	
11.1	52	125.6	
11.5	53	127.4	
12.1	54	129.2	
12.6	55	131.0	
13.2	56	132.8	
13.7	57	134.6	
14.3	58	136.4	
14.8	59	138.2	
15.6	60	140.0	
16.1	61	141.8	
16.8	62	143.6	
17.1	63	145.4	

°C ←	°F	°C →	°F
17.7	64	147.2	
18.2	65	149.0	
18.8	66	150.8	
19.3	67	152.6	
19.9	68	154.4	
20.4	69	156.2	
21.0	70	158.0	
21.5	71	159.8	
22.2	72	161.8	
22.7	73	163.4	
23.3	74	165.2	
23.8	75	167.0	
24.4	76	168.8	
25.0	77	170.6	
25.5	78	172.4	
26.2	79	174.2	
26.8	80	176.0	
27.3	81	177.8	
27.7	82	179.6	
28.2	83	181.4	
28.8	84	183.2	
29.3	85	185.0	
29.9	86	186.8	
30.4	87	188.6	
31.0	88	190.4	
31.5	89	192.2	
32.1	90	194.0	
32.6	91	195.8	
33.3	92	197.6	
33.8	93	199.4	
34.4	94	201.2	
34.9	95	203.0	
35.5	96	204.8	
36.1	97	206.6	
36.6	98	208.4	

°C ←	°F	°C →	°F
37.1	99	210.2	
37.7	100	212.0	
38	100.4	212.7	
43	110	230	
49	120	248	
54	130	266	
60	140	284	
65	150	302	
71	160	320	
76	170	338	
83	180	356	
88	190	374	
93	200	392	
121	250	482	
149	300	572	
177	350	662	
204	400	752	
232	450	842	
260	500	932	
288	550	1022	
315	600	1112	
343	650	1202	
371	700	1292	
399	750	1382	
426	800	1472	
454	850	1562	
482	900	1652	
510	950	1742	
538	1000	1832	
566	1050	1922	
593	1100	2012	
648	1200	2192	
704	1300	2372	
760	1400	2552	
815	1500	2732	

Linear Shaft Velocity Quick Reference Table

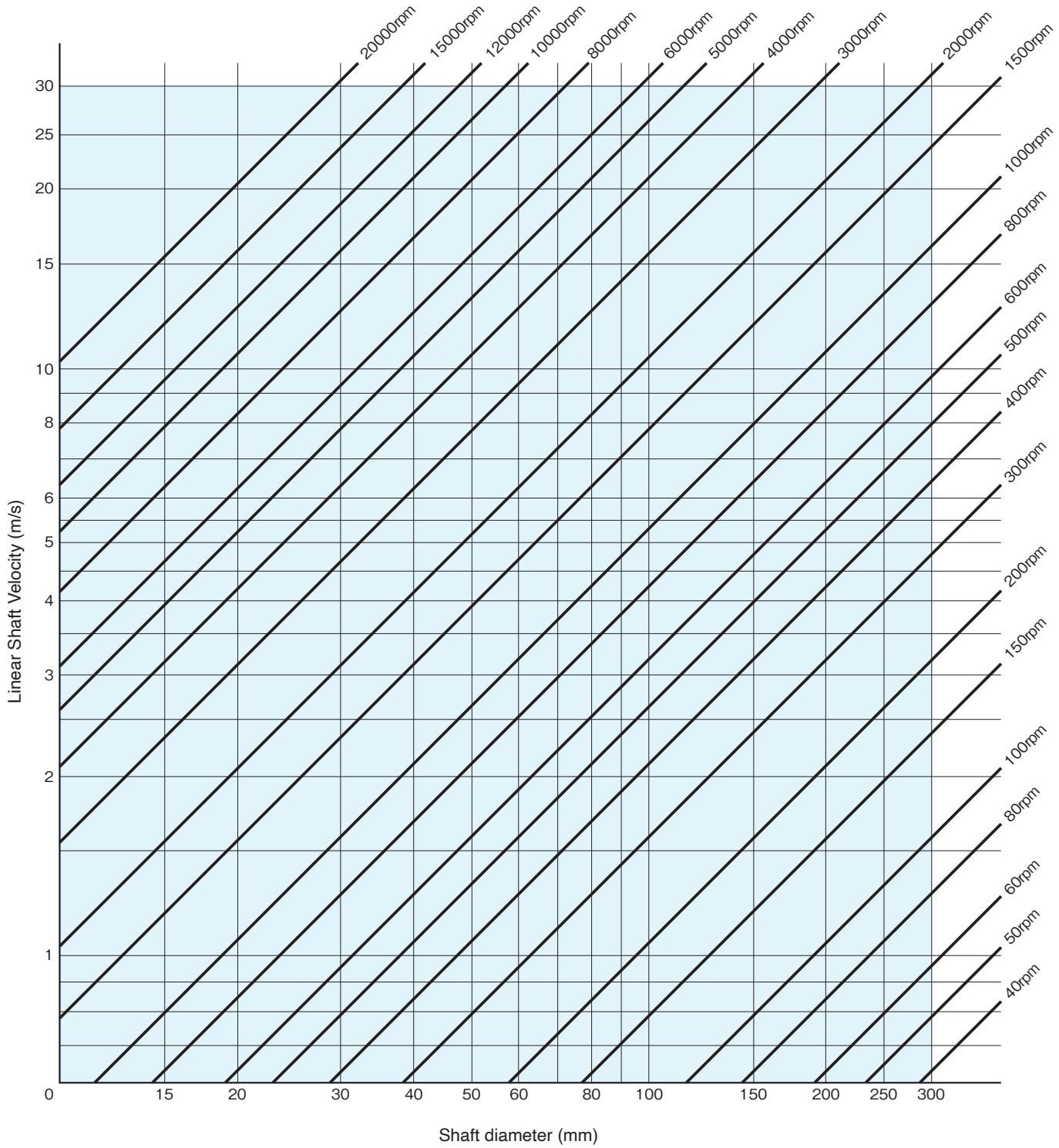

13. KLÜBER LUBRICANTS FOR SEALING

Together with Klüber Lubrication München GmbH & Co. KG, a German company with 100 years of history as a supplier of specialty lubricants, NOK has established NOK KLÜBER CO., LTD. as a joint venture for providing Klüber lubricants for use in sealing applications.
NOK KLÜBER CO., LTD. carries on the technologies passed down through generations by both companies, and it leverages its proven track record and broad range of knowledge obtained through its extensive testing to provide a wide range of lubrication solutions.
Based on its abundant wealth of knowledge on a multitude of lubricants that it has built up throughout the years, NOK KLÜBER CO., LTD. is ready to meet the needs of its customers for the most demanding of conditions, such as for high-temperature, low-temperature, high-speed, and high-load bearing applications.

Types and Applications of NOK KLÜBER Lubricants

- **Types of lubricants**
  Oil, Grease, Paste, Wax, Spray, Coating
- **Applications**
  Rolling bearings, Sliding bearings, Chains, Gears, Valves, etc.
- **Special applications**
  For Food, Vaccum, Electronic devices, sealing lubricants

Handling of NOK KLÜBER Lubricants to Oil Seals

- **Coating**
  Apply a coating evenly to the lip contact face. (Refer to the photograph on page 45.)

List of Klüber Lubricants for Sealing

Application	Name of grease	Compatible with Rubbersr *1					Usage temperature range (°C)	Consistency (NLGI grade)	Usage examples	Features
		Nitrile rubber	Acrylic rubber	Silicone rubber	Fluororubber	Ethylene polypropylene rubber				
General use	SEALUB S-1	○	○	△	△	×	–30 - 120	2	Automobiles, construction machinery, agricultural machinery, etc.	General-purpose lubricants for rubber
Water resistance	SEALUB S-8	△	△	×	○	○	–45 - 160	3	Automobiles, household goods/equipment, etc.	Excellent water and steam resistance
Low temp./ high-speed	SEALUB S-14	○	○	△	○	×	–50 - 150	2	Automobiles, household electrical appliances, industrial machinery, etc.	Can widely be used for low to high temp. applications
Assembly (Spray)	SEALUB L101	○	○	○	○	△	–30 - 90	Wax	Assembly and insertion of various sealed parts, etc.	Quick-drying wax and spray products for assembly
Adhesion prevention (Spray)	KLÜBER L604	○	○	○	○	○	–25 - 260	Oil	Assembly and adhesion prevention treatment of various sealed parts, etc. Lubrication of electrical contacts and plastic parts, high-temperature sliding parts	Fluorinated oil for high-temperature use, adhesion prevention oil, spray products
Food processing machinery	Klübersynth UH1 64-2403	○	○	○	○	×	–10 - 140	3	Manufacturing equipment for food and beverages	Excellent water and steam resistance NSF H1*2 registered
	PARALIQ GTE 703	○	○	×	○	○	–50 - 150	3		
High temp., solvent and chemical resistance	SEALUB 502	○	○	○	○	○	–35 - 260	2	Assembly for seals, Fuel cell etc.	Highly superior thermal stability, solvent and chemical resistance

*1: Compatible with Rubbers
○: Compatible
(Recommend to test by actual conditions before use)
△: Consult with NOK before use
×: Not compatible

*2: NSF H1 lubricants
These lubricants can be used in locations for which incidental contact with food products is unavoidable.

To Order Oil Seals

1

Contact your nearest NOK sales office or agent.
When ordering, please indicate the NOK part number and the relevant dimensions.
The notation of NOK Type on the catalog is written initial 2 figures except for particular NOK Type.

Example: SB2 --> SB

Order entry example:

NOK Part Number, Type and Size (Type, Shaft diameter, Outside diameter, Width)
AC0052E3, Type: SC, Shaft diameter: 6, Outside diameter: 16, Width: 7

2

Consult us when you need an oil seal not listed in this catalog, or if you are not sure which product to select for special working conditions.

3

[Special Order]
A quote will be provided to you for oil seals not listed in the catalog, or when you require a standard-dimension seals made from non-standard materials (e.g., rubber, metal case, garter spring).

14. TYPE & SIZE LIST OF OIL SEALS

Type & Material List of Oil Seals

When using specific product models, please make sure to check the general standards for their allowable operating conditions (pages 10 through 15).

Type	Page Numbers Showing	NOK Oil Seal, Lip Material				
		Nitrile Rubber (NBR)		Acrylic Rubber (ACM)	silicone rubber (VMQ)	Fluorocarbon Rubber (FKM)
Standard Oil Seals (shaft diameter of 300mm or less)						
SC	90	A727 Shaft diameter 150mm or less	A941 Shaft diameter over 150mm	T303	S728	F585
SB	99					
TC	108					
TB	116					
TCK	122	A727+31FH*1		—	—	—
VC	123	A727 Shaft diameter 150mm or less	A941 Shaft diameter over 150mm	—	—	—
VB						
KC	128	A727		—	—	—
KB						
TCZ	129	A795		—	—	F548
TCV	130					
TCN	131					
TC4	132	A795		—	—	—
TB4						
General Oil Seals						
OC	134	A727		—	—	—
QLFY	135	A571		—	—	—
VR	136	A134		—	—	—
SBB	138	A941		—	—	—
Large-diameter SB						
Large-diameter TB	143					
MG	144	A103 (Press-fit area: A992) A104 (Press-fit area: A104) Part Number: ★		—	—	—
PTFE Seals						
TCJ	146	A103+31BF*2		T303+31BF*2	—	—
SA1J	147	31BF*2				
VAJ						
KA3J						
SUS Spring Specification Oil Seals						
—	148	—				

Note: The oil seal cross-section shapes shown in the individual dimension tables are depicted as representative shapes.
*1: 31FH is composed of New Fabric
*2: 31BF is composed of Rareflon (PTFE)

Standard Oil Seals

SC Type

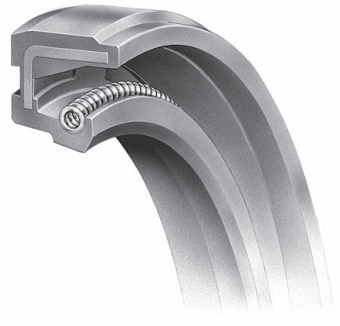

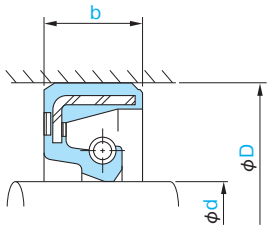

SC type

- The sectional view on the right shows the typical proifle of the seal type.
- Please refer to page 25 for the respective advantages and disadvantages of Types B and C.
- Check the guide to allowable operating conditions on pages 10 and 11 for relevant information on the seal selected before use.
- If there is an "※" at the end of the part number, as this indicates that an SUS spring specification is available, we ask that you refer to the introduction on SUS spring specifications on page 148.

■When ordering, please indicate the NOK part number and the relevant dimensions.

Order Example NOK Part Number: AC 0052 E3
Type: SC, Shaft diametaer: 6, Outside diameter: 16, Width: 7

Dimensions			Part Number			
Shaft diameter d	Outside diameter D	Width b	Nitrile (NBR) shaft diameter of 150 mm or less: A727 shaft diameter over 150 mm: A941	Acrylic (ACM) T303	Silicon (VMQ) S728	Fluorocarbon (FKM) F585
6	16	7	AC 0052 E3	—	—	—
7	18	7	AC 0087 E0	—	—	—
7	20	7	AC 0090 A0	—	—	AC 0090 E3
8	18	7	AC 0145 E0 ※	—	—	—
8	22	7	AC 0158 A8	—	AC 0158 A9	AC 0158 F2
9	22	7	AC 0205 A0	—	—	—
10	20	7	AC 0260 H0	—	—	—
10	21	8	AC 0267 E0 ※	—	—	—
10	22	7	—	AC 0270 E1	—	—
10	22	8	AC 0271 E0	—	—	—
10	25	7	AC 0279 A0	AC 0279 A1	AC 0279 A6	—
10	26	8	AC 0283 E0	—	—	—
10	28	8	AC 0285 E0	—	—	—
10	30	7	AC 0288 E0	—	—	—
11	22	7	AC 0308 E1	—	—	—
11	25	7	AC 0311 E0	—	—	—
11	30	7	AC 0314 E0	—	—	—
12	22	7	AC 0371 E0	—	—	AC 0371 G1
12	25	7	AC 0382 A0	AC 0382 A1	AC 0382 A6	—
12	28	7	AC 0387 E0			—
12	30	9	AC 0393 E0	—	—	—
12	32	7	—	—	—	AC 0399 E1
13	25	7	AC 0473 F0	—	—	—
13	28	7	AC 0478 A0	—	—	—
13	30	8	AC 0483 E1	—	—	—
13	30	9	—	—	—	AC 0484 F2
14	24	6	AC 0514 E0	—	—	—
14	25	7	AC 0519 E0	—	—	—
14	28	7	AC 0526 A0 ※	—	AC 0526 E1	—
14	32	9	AC 0536 E0	—		—
15	24	7	AC 0584 E1	—	—	—
15	25	7	AC 0588 E5	—	—	—
15	28	7	AC 0592 E1 ※	—	—	—
15	30	7	AC 0598 A0 ※	AC 0598 G0	AC 0598 A5	AC 0598 E0 ※
15	32	7	AC 0603 E0 ※			—
15	32	9	AC 0604 E0	—	—	—
15	34	10	AC 0606 E0	—	—	—
15	35	7	AC 0610 F3	—	AC 0610 E2	AC 0610 E3
15	35	8	AC 0611 E0	—	—	—
15	37	7	AC 0616 E0	—	—	—
16	26	7	AC 0678 E0	—	—	—
16	28	6	AC 0684 E1	—	—	—
16	28	7	AC 0685 F0	—	—	—
16	30	7	AC 0687 A0 ※	AC 0687 F1	AC 0687 A2	—
16	32	8	AC 0691 E0	—	—	—

Standard Oil Seals

SC Type

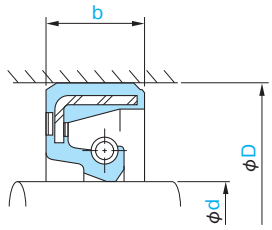

SC type

- The sectional view on the right shows the typical proifle of the seal type.
- Please refer to page 25 for the respective advantages and disadvantages of Types B and C.
- Check the guide to allowable operating conditions on pages 10 and 11 for relevant information on the seal selected before use.
- If there is an "※" at the end of the part number, as this indicates that an SUS spring specification is available, we ask that you refer to the introduction on SUS spring specifications on page 148.

■When ordering, please indicate the NOK part number and the relevant dimensions.

Order Example NOK Part Number: AC 0742 E0
Type: SC, Shaft diametaer: 17, Outside diameter: 30, Width: 6

Dimensions			Part Number			
Shaft diameter d	Outside diameter D	Width b	Nitrile (NBR) shaft diameter of 150 mm or less: A727 shaft diameter over 150 mm: A941	Acrylic (ACM) T303	Silicon (VMQ) S728	Fluorocarbon (FKM) F585
17	30	6	AC 0742 E0 ※	—	—	—
17	30	7	AC 0743 E0	—	—	AC 0743 F0 ※
17	30	8	AC 0745 E0	AC 0745 G0	—	AC 0745 F2
17	32	7	AC 0750 E1 ※	—	—	—
17	35	6	AC 0758 E0	—	—	—
17	35	7	AC 0759 H0	—	—	—
17	35	8	AC 0760 A0	—	AC 0760 A2	—
17	38	7	AC 0768 E1	—	—	—
17	40	8	AC 0771 F0	—	—	—
17	40	10	AC 0773 E0	—	—	—
18	30	7	AC 0816 E0	—	—	—
18	30	8	AC 0817 E0	AC 0817 G0	—	AC 0817 F1
18	32	9	AC 0825 E0	—	—	—
18	35	7	AC 0828 E0 ※	—	—	—
18	35	8	AC 0829 A0	—	AC 0829 A4	—
18	38	7	AC 0838 E0	—	—	—
19	30	8	AC 0864 F0	—	—	—
19	35	8	AC 0875 A0	—	—	AC 0875 F0 ※
19	40	10	AC 0883 E0	—	—	—
20	30	7	AC 0984 E0	—	—	—
20	30	9	AC 0987 E0	—	—	—
20	32	8	AC 0997 E0 ※	—	—	—
20	34	7	AC 1003 E1	—	—	—
20	35	7	AC 1012 E0	—	AC 1012 G1	—
20	35	8	AC 1013 A0	AC 1013 A1	AC 1013 A2	AC 1013 E1
20	36	7	AC 1017 E0	—	AC 1017 F0	—
20	40	7	AC 1029 E0	—	—	—
20	40	8	AC 1030 E0	—	—	AC 1030 F0
20	40	10	AC 1032 F0	—	—	—
20	40	11	AC 1033 A0	—	—	AC 1033 E4
20	42	10	AC 1038 E0	—	—	—
20	45	12	AC 1045 E0 ※	—	—	—
20	47	7	AC 1048 E0	—	—	—
21	35	7	AC 1084 E1	—	—	—
22	32	7	AC 1116 E3	—	—	—
22	35	7	AC 1126 F0	—	—	—
22	35	8	AC 1127 E0	—	—	—
22	36	10	AC 1130 E0	—	—	—
22	37	8	AC 1131 E0	—	—	—
22	38	8	AC 1133 E0	—	—	—
22	38	12	AC 1136 E0 ※	—	—	—
22	40	8	AC 1138 E0	—	—	—
22	40	10	AC 1140 E0	—	—	—
22	42	7	AC 1145 E0	—	—	—
22	42	10	AC 1147 E0	—	—	AC 1147 F0

Standard Oil Seals

SC Type

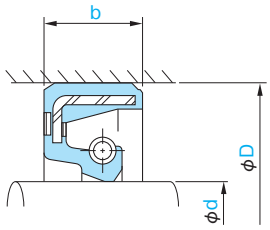

SC type

- The sectional view on the right shows the typical proifle of the seal type.
- Please refer to page 25 for the respective advantages and disadvantages of Types B and C.
- Check the guide to allowable operating conditions on pages 10 and 11 for relevant information on the seal selected before use.
- If there is an "※" at the end of the part number, as this indicates that an SUS spring specification is available, we ask that you refer to the introduction on SUS spring specifications on page 148.

■When ordering, please indicate the NOK part number and the relevant dimensions.

Order Example NOK Part Number: AC 1148 A0
Type: SC, Shaft diametaer: 22, Outside diameter: 42, Width: 11

Dimensions			Part Number			
Shaft diameter d	Outside diameter D	Width b	Nitrile (NBR) shaft diameter of 150 mm or less: A727 shaft diameter over 150 mm: A941	Acrylic (ACM) T303	Silicon (VMQ) S728	Fluorocarbon (FKM) F585
22	42	11	AC 1148 A0	—	—	—
23	32	7	AC 1213 P1	—	—	—
23	42	11	AC 1224 A0	—	—	—
24	38	7	AC 1251 E0	—	—	—
24	38	8	AC 1252 E0	—	—	—
24	40	7	AC 1259 E0	—	—	—
24	40	8	AC 1260 A0 ※	—	—	—
25	35	6	AC 1292 G0	—	—	—
25	37	8	AC 1302 F0	—	—	—
25	38	7	AC 1306 E0	—	—	—
25	40	8	AC 1314 A0	AC 1314 A1	AC 1314 A2	AC 1314 F0
25	40	10	AC 1315 E0	—	—	—
25	42	8	AC 1322 E0	—	—	—
25	42	10	AC 1324 E0	—	—	—
25	42	11	AC 1325 E0	—	—	—
25	44	7	AC 1327 F0	—	—	—
25	45	7	AC 1334 E0	—	—	—
25	45	8	AC 1335 E0	—	—	—
25	45	11	AC 1338 A7	—	AC 1338 A2	AC 1338 G1
25	47	6	AC 1348 E1	—	—	—
25	47	7	AC 1350 E0	—	—	—
25	48	8	AC 1357 E0	—	—	—
25	50	9	AC 1361 E0	—	—	—
25	52	8	AC 1374 E2	—	—	—
26	38	8	AC 1464 E0	—	—	—
26	40	8	AC 1468 E0	—	—	—
26	42	8	AC 1474 A0 ※	—	AC 1474 A2	—
27	42	8	AC 1511 E0	—	—	—
27	43	9	AC 1512 E0	—	—	—
27	47	11	AC 1518 A0	—	AC 1518 A2	—
28	38	7	AC 1531 F0	—	—	—
28	40	8	AC 1538 F0	AC 1538 H0	—	—
28	42	8	AC 1544 E0	—	—	—
28	44	8	AC 1545 E0	—	—	—
28	44	11	AC 1546 E0	—	—	—
28	45	8	AC 1550 E0	—	—	—
28	48	11	AC 1563 A0	AC 1563 A1	—	—
28	50	8	AC 1569 E0	—	—	—
28	50	10	AC 1570 E0	—	—	—
30	42	8	AC 1666 E2 ※	—	—	—
30	44	9	AC 1673 E0	—	—	—
30	45	7	AC 1677 E1	—	—	—
30	45	8	AC 1679 A0 ※	AC 1679 A1	AC 1679 A5	—
30	45	9	—	—	—	AC 1680 E1 ※
30	45	11	AC 1681 E0	—	—	—

Standard Oil Seals

SC Type

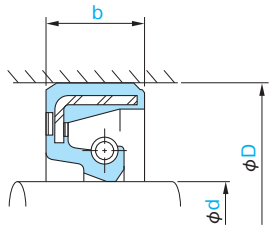

SC type

- The sectional view on the right shows the typical proifle of the seal type.
- Please refer to page 25 for the respective advantages and disadvantages of Types B and C.
- Check the guide to allowable operating conditions on pages 10 and 11 for relevant information on the seal selected before use.
- If there is an "※" at the end of the part number, as this indicates that an SUS spring specification is available, we ask that you refer to the introduction on SUS spring specifications on page 148.

■When ordering, please indicate the NOK part number and the relevant dimensions.

Order Example NOK Part Number: AC 1682 E0
Type: SC, Shaft diametaer: 30, Outside diameter: 45, Width: 12

Dimensions			Part Number			
Shaft diameter d	Outside diameter D	Width b	Nitrile (NBR) shaft diameter of 150 mm or less: A727 shaft diameter over 150 mm: A941	Acrylic (ACM) T303	Silicon (VMQ) S728	Fluorocarbon (FKM) F585
30	45	12	AC 1682 E0	—	—	AC 1682 F1
30	46	9	AC 1689 E0	—	—	—
30	47	8	AC 1692 E0	—	—	—
30	48	8	AC 1700 E0	—	—	—
30	48	11	AC 1702 E0	—	—	—
30	50	7	AC 1704 E0	—	—	—
30	50	9	AC 1706 E0	—	—	—
30	50	10	AC 1708 E0	—	—	—
30	50	11	AC 1709 A0 ※	AC 1709 A1	AC 1709 A2	AC 1709 E3
30	52	7	AC 1719 E0	—	—	—
30	52	10	AC 1721 E0	—	—	—
30	52	12	—	—	AC 1724 E1	
31	47	7	AC 1797 E1	—	—	—
31	50	8	AC 1799 E0	—	—	—
32	44	9	AC 1871 G1 ※	—	—	—
32	45	8	AC 1880 E0	—	—	AC 1880 H1
32	46	8	AC 1884 E0	—	—	—
32	48	7	AC 1893 E0	—	—	—
32	51	10	AC 1898 E0	—	—	—
32	52	8	AC 1902 E0	—	—	—
32	52	11	AC 1904 A0	AC 1904 A1	AC 1904 A4	AC 1904 E4
33	50	7	AC 1933 E0	—	—	—
33	50	8	AC 1934 E0	—	—	—
33	52	7	AC 1937 E0	—	—	—
33	56	12	AC 1939 E0	—	—	—
34	48	8	AC 1968 G1	—	—	—
34	50	7	AC 1971 E0	—	—	—
34	54	11	AC 1978 A0	—	—	—
35	47	7	AC 2041 E0	—	—	—
35	48	8	AC 2048 E0	—	—	—
35	50	7	AC 2056 E0	—	—	—
35	50	8	AC 2057 A0 ※	AC 2057 A1	AC 2057 A7	AC 2057 E4
35	50	11	AC 2060 E0	—	—	—
35	52	7	AC 2066 E0	—	—	—
35	52	8	AC 2067 E0	—	—	—
35	52	9	AC 2068 E0	—	—	—
35	52	10	AC 2069 E0	—	—	AC 2069 F0
35	55	8	AC 2081 E0	—	—	AC 2081 G0
35	55	11	AC 2085 A0	AC 2085 A1	—	AC 2085 E2
35	56	10	AC 2094 E0	—	—	—
35	58	9	AC 2099 E0	—	—	—
35	60	8	AC 2103 E1	—	—	—
35	60	12	AC 2107 E0	—	—	—
35	62	10	AC 2118 E0	—	—	—
35	62	12	AC 2121 E0	—	—	—

Standard Oil Seals

SC Type

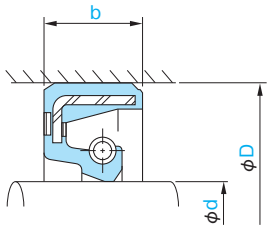

SC type

- The sectional view on the right shows the typical proifle of the seal type.
- Please refer to page 25 for the respective advantages and disadvantages of Types B and C.
- Check the guide to allowable operating conditions on pages 10 and 11 for relevant information on the seal selected before use.
- If there is an "※" at the end of the part number, as this indicates that an SUS spring specification is available, we ask that you refer to the introduction on SUS spring specifications on page 148.

■When ordering, please indicate the NOK part number and the relevant dimensions.

Order Example NOK Part Number: AC 2162 E0
Type: SC, Shaft diametaer: 36, Outside diameter: 50, Width: 7

Dimensions			Part Number			
Shaft diameter d	Outside diameter D	Width b	Nitrile (NBR) shaft diameter of 150 mm or less: A727 shaft diameter over 150 mm: A941	Acrylic (ACM) T303	Silicon (VMQ) S728	Fluorocarbon (FKM) F585
36	50	7	AC 2162 E0	—	—	—
36	54	8	AC 2166 E0	—	—	—
37	62	12	AC 2204 E0	—	—	—
38	50	8	AC 2218 E0	—	—	—
38	55	8	AC 2230 E0	—	—	—
38	55	9	AC 2231 E0	—	—	—
38	56	10	AC 2233 E1	—	—	—
38	58	8	AC 2239 E0	—	—	—
38	58	11	AC 2240 A7	AC 2240 A1	AC 2240 A2	AC 2240 E2 ※
38	62	11	AC 2250 E0	—	—	—
40	52	8	AC 2343 E4 ※	—	—	—
40	55	7	AC 2358 E1	—	—	—
40	55	8	AC 2359 E0	—	—	—
40	55	9	AC 2361 E0	—	—	—
40	55	10	AC 2362 E0	—	—	—
40	56	8	AC 2365 E0	—	—	—
40	58	7	AC 2368 E0	—	—	—
40	58	8	AC 2369 A0	AC 2369 E0	AC 2369 A9	—
40	60	8	AC 2375 E0	—	—	—
40	60	10	AC 2377 E0	—	—	—
40	60	12	—	—	—	AC 2379 F1
40	62	7	AC 2385 E0	—	—	—
40	62	8	AC 2386 E0	—	—	—
40	62	11	AC 2388 A0 ※	—	AC 2388 A2	—
40	62	12	AC 2390 E0	—	AC 2390 F0	AC 2390 G6
40	65	10	AC 2402 E0	—	—	—
40	65	12	AC 2403 E0	—	—	—
40	65	14	AC 2405 E0	—	—	—
42	58	10	AC 2491 E0	—	—	—
42	60	9	AC 2493 E0	—	—	—
42	62	10	AC 2499 E0	—	—	—
42	65	9	AC 2504 E0	—	—	—
42	65	12	AC 2507 A0	—	AC 2507 E0	—
43	60	10	AC 2539 E0	—	—	—
45	60	9	AC 2643 E0	—	—	—
45	62	9	AC 2651 A8	AC 2651 A1	AC 2651 A2	—
45	62	10	AC 2652 E0	—	—	—
45	62	12	AC 2653 E0	—	—	—
45	65	10	AC 2658 E0	—	—	—
45	65	12	AC 2659 E0	—	—	—
45	68	9	AC 2666 E0	—	—	—
45	68	10	AC 2667 E0	—	—	—
45	68	12	AC 2668 A0 ※	AC 2668 A1	—	AC 2668 E1
45	70	12	AC 2676 E0	—	—	—
45	70	14	AC 2677 E0	—	—	—

Standard Oil Seals

SC Type

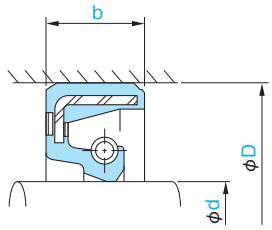

SC type

- The sectional view on the right shows the typical proifle of the seal type.
- Please refer to page 25 for the respective advantages and disadvantages of Types B and C.
- Check the guide to allowable operating conditions on pages 10 and 11 for relevant information on the seal selected before use.
- If there is an "※" at the end of the part number, as this indicates that an SUS spring specification is available, we ask that you refer to the introduction on SUS spring specifications on page 148.

■When ordering, please indicate the NOK part number and the relevant dimensions.

Order Example NOK Part Number: AC 2684 E0
Type: SC, Shaft diametaer: 45, Outside diameter: 72, Width: 10

Dimensions			Part Number			
Shaft diameter d	Outside diameter D	Width b	Nitrile (NBR) shaft diameter of 150 mm or less: A727 shaft diameter over 150 mm: A941	Acrylic (ACM) T303	Silicon (VMQ) S728	Fluorocarbon (FKM) F585
45	72	10	AC 2684 E0	—	—	—
45	72	12	AC 2685 E0	—	—	—
46	65	9	AC 2717 E0	—	—	—
47	70	12	AC 2735 E0	—	—	—
48	65	9	AC 2780 E0	—	—	—
48	68	10	AC 2785 E0	—	—	—
48	70	9	AC 2788 E0	—	—	—
48	70	12	AC 2791 A0	—	AC 2791 A2	AC 2791 E0
50	65	9	AC 2838 G2	—	—	—
50	68	9	AC 2847 E0 ※	—	AC 2847 A2	AC 2847 F3
50	68	10	AC 2848 E0	—	—	—
50	70	10	AC 2854 E0	—	—	—
50	70	12	AC 2857 E0	—	—	—
50	72	9	AC 2861 E0	—	—	—
50	72	12	AC 2864 K0	AC 2864 A1	AC 2864 A2	AC 2864 G5
50	72	13	AC 2865 E0	—	—	—
50	74	12	AC 2872 E0	—	—	—
50	80	12	AC 2887 E0	—	—	—
50	80	14	AC 2888 E0	—	—	—
52	70	9	AC 2959 E0	—	—	—
52	72	10	AC 2961 E0	—	—	—
52	75	9	AC 2965 E0	—	—	—
52	75	12	AC 2967 A5	—	—	—
54	72	12	AC 3014 E0	—	—	—
54	82	10	AC 3021 E1	—	—	—
55	70	9	AC 3036 E0	—	—	—
55	72	9	AC 3040 A0 ※	—	AC 3040 A7	—
55	78	9	AC 3053 E1	—	—	—
55	78	12	AC 3055 A0 ※	AC 3055 A1	AC 3055 F0	AC 3055 H2
55	80	12	AC 3062 E0	—	—	—
55	85	14	AC 3072 E0	—	—	—
56	78	12	AC 3094 E0	—	—	—
57	78	10	AC 3107 E1	—	—	—
58	75	9	AC 3148 E0	—	—	—
58	80	9	AC 3152 E0	—	—	—
58	80	12	AC 3154 A9	—	—	AC 3154 A7
60	75	9	AC 3193 E2	—	—	—
60	78	9	AC 3204 E0	—	—	AC 3204 F2
60	80	10	AC 3211 E0	—	AC 3211 F1	AC 3211 G1
60	80	12	AC 3213 E0	—	—	—
60	82	9	AC 3220 E0	—	—	—
60	82	12	AC 3222 A0	AC 3222 A1	AC 3222 A2	AC 3222 E8
60	85	12	AC 3234 E0	—	—	—
60	90	13	—	—	—	AC 3243 E1
62	80	9	AC 3290 E0	—	—	—

Standard Oil Seals

SC Type

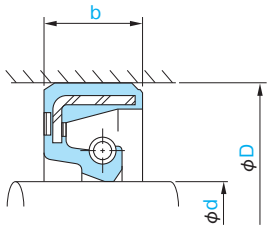

SC type

- The sectional view on the right shows the typical proifle of the seal type.
- Please refer to page 25 for the respective advantages and disadvantages of Types B and C.
- Check the guide to allowable operating conditions on pages 10 and 11 for relevant information on the seal selected before use.
- If there is an "※" at the end of the part number, as this indicates that an SUS spring specification is available, we ask that you refer to the introduction on SUS spring specifications on page 148.

■When ordering, please indicate the NOK part number and the relevant dimensions.

Order Example NOK Part Number: AC 3295 E0
Type: SC, Shaft diametaer: 62, Outside diameter: 85, Width: 9

Dimensions			Part Number			
Shaft diameter d	Outside diameter D	Width b	Nitrile (NBR) shaft diameter of 150 mm or less: A727 shaft diameter over 150 mm: A941	Acrylic (ACM) T303	Silicon (VMQ) S728	Fluorocarbon (FKM) F585
62	85	9	AC 3295 E0	—	—	—
62	85	12	AC 3297 A0 ※	AC 3297 A1	AC 3297 A4	—
63	80	9	AC 3316 E0	—	—	—
63	85	12	AC 3321 E0	—	—	—
65	82	10	AC 3389 E0	—	—	—
65	82	12	AC 3390 E0	—	—	—
65	85	10	AC 3394 E1 ※	—	—	—
65	85	12	AC 3395 E0	—	—	—
65	88	12	AC 3400 A0	—	AC 3400 A2	—
65	90	10	AC 3406 E0	—	—	—
65	90	12	AC 3408 E0	—	—	—
65	90	13	AC 3409 A0	—	AC 3409 A2	AC 3409 G2
65	95	12	AC 3413 E0	—	—	—
65	95	14	AC 3414 F0	—	—	AC 3414 E0
66	86	10	AC 3427 E0	—	—	—
67	90	10	AC 3451 E0	—	—	—
68	90	12	AC 3459 A4	—	—	—
68	95	13	AC 3463 E0	—	—	—
70	88	12	AC 3505 E0	—	—	—
70	90	12	AC 3513 E1	—	—	—
70	92	12	AC 3519 A0 ※	—	AC 3519 A2	AC 3519 G6
70	95	13	AC 3527 A0	AC 3527 A1	—	—
70	100	14	AC 3532 E0	—	—	—
71	95	13	AC 3549 E1	—	—	—
72	100	12	AC 3562 E0 ※	—	—	—
75	95	10	—	AC 3609 F0	—	—
75	100	13	AC 3618 E0	AC 3618 A1	AC 3618 A4	AC 3618 F5
75	105	12	AC 3628 E0	—	—	—
75	105	15	AC 3631 E0	—	—	—
80	100	9	AC 3731 E0	—	—	—
80	100	10	AC 3732 E1 ※	AC 3732 G0	—	—
80	105	13	AC 3744 A0	AC 3744 A1	AC 3744 A2	AC 3744 I2 ※
80	115	15	AC 3761 E0	—	—	—
82	105	13	AC 3786 E0	—	—	—
85	110	13	AC 3842 G0 ※	AC 3842 A1	AC 3842 A2	AC 3842 F1
85	120	15	AC 3855 E0	—	—	—
88	115	13	AC 3879 E0	—	—	—
90	115	13	AC 3932 A0 ※	AC 3932 A1	AC 3932 F1	AC 3932 E5
90	120	13	AC 3938 E0	—	—	—
90	125	15	AC 3944 E0	—	—	—
95	120	13	AC 3994 E0	AC 3994 A1	AC 3994 A2	AC 3994 A5
95	130	15	AC 4007 E0	—	—	—
100	125	13	AC 4063 G2 ※	—	AC 4063 F1	AC 4063 H0
105	135	14	AC 4153 F0 ※	—	—	AC 4153 E6
110	140	14	AC 4212 E0 ※	—	—	AC 4212 F6 ※

Standard Oil Seals

SC Type

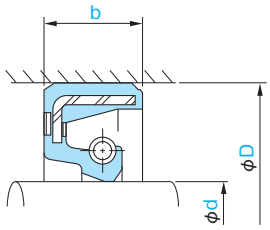

SC type

- The sectional view on the right shows the typical proifle of the seal type.
- Please refer to page 25 for the respective advantages and disadvantages of Types B and C.
- Check the guide to allowable operating conditions on pages 10 and 11 for relevant information on the seal selected before use.
- If there is an "※" at the end of the part number, as this indicates that an SUS spring specification is available, we ask that you refer to the introduction on SUS spring specifications on page 149.

■When ordering, please indicate the NOK part number and the relevant dimensions.

Order Example NOK Part Number: AC 4282 F0

Type: SC, Shaft diametaer: 115, Outside diameter: 145, Width: 14

Dimensions			Part Number			
Shaft diameter d	Outside diameter D	Width b	Nitrile (NBR) shaft diameter of 150 mm or less: A727 shaft diameter over 150 mm: A941	Acrylic (ACM) T303	Silicon (VMQ) S728	Fluorocarbon (FKM) F585
115	145	14	AC 4282 F0	—	AC 4282 E2	—
120	150	14	AC 4346 F0 ※	—	—	AC 4346 E0
120	155	16	AC 4355 E0	—	—	—
125	155	14	AC 4399 E1	—	—	—
125	160	16	AC 4404 E0	—	—	—
130	160	14	AC 4451 F2 ※	—	—	—
130	170	16	AC 4465 E0	—	—	—
135	165	14	AC 4498 E0	—	—	AC 4498 F4
140	170	14	AC 4542 E0	—	—	—
140	185	16	AC 4558 E0	—	—	—
145	175	14	AC 4581 E0	—	—	AC 4581 G1
145	190	16	AC 4588 E0	—	—	—
150	180	14	AC 4624 E1 ※	AC 4624 F1	AC 4624 F2	AC 4624 G1 ※
155	190	14	AC 4672 E0	—	—	—
160	190	15	AC 4712 E0	—	—	—
160	190	16	AC 4713 E3	—	—	—
160	195	18	AC 4717 E2	—	—	—
160	200	15	—	—	—	AC 4720 E1 ※
160	210	20	AC 4724 E3	—	—	—
170	200	16	—	—	—	AC 4795 E0
170	210	15	AC 4804 E0	—	—	—
170	225	20	AC 4815 E0	—	—	—
180	210	15	AC 4897 F0 ※	—	—	—
180	210	16	AC 4898 E0	—	—	—
180	220	20	AC 4911 E1	—	—	—
190	220	15	AC 4975 E4 ※	—	—	—
190	225	15	AC 4982 E0	—	—	—
190	226	20	—	—	—	AC 4985 E1
190	245	22	AC 4993 E0	—	—	—
200	230	14	AC 5052 E0	—	—	—
200	230	15	AC 5053 E1	—	—	—
200	230	16	AC 5054 E0	—	—	—
200	240	20	AC 5068 E4 ※	—	—	—
200	242	20	AC 5070 E1	—	—	—
200	250	16	AC 5075 E0	—	—	—
210	240	15	AC 5133 E0	—	—	—
210	250	20	AC 5140 E0	—	—	—
210	265	25	AC 5147 E1	—	—	—
220	250	15	AC 5204 E6	—	—	AC 5204 E3
220	255	16	AC 5207 E0	—	—	—
220	259	22	AC 5210 E0	—	—	—
220	275	23	AC 5224 E0	—	—	—
230	260	15	AC 5281 E0	—	—	—
230	285	23	AC 5296 E0	—	—	—
240	270	15	AC 5339 E0	—	—	—

Standard Oil Seals

SC Type

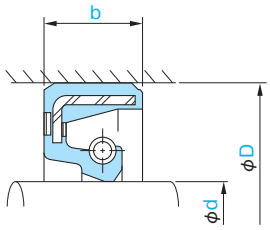

SC type

- The sectional view on the right shows the typical proifle of the seal type.
- Please refer to page 25 for the respective advantages and disadvantages of Types B and C.
- Check the guide to allowable operating conditions on pages 10 and 11 for relevant information on the seal selected before use.
- If there is an "※" at the end of the part number, as this indicates that an SUS spring specification is available, we ask that you refer to the introduction on SUS spring specifications on page 149.

■When ordering, please indicate the NOK part number and the relevant dimensions.

Order Example NOK Part Number: AC 5346 E2
Type: SC, Shaft diametaer: 240, Outside diameter: 275, Width: 16

Dimensions			Part Number			
Shaft diameter d	Outside diameter D	Width b	Nitrile (NBR) shaft diameter of 150 mm or less: A727 shaft diameter over 150 mm: A941	Acrylic (ACM) T303	Silicon (VMQ) S728	Fluorocarbon (FKM) F585
240	275	16	AC 5346 E2	—	—	AC 5346 F0
240	300	25	—	AC 5361 E3	—	—
250	280	15	AC 5398 E1	—	—	—
250	285	16	—	AC 5403 E0	—	—
250	290	16	—	AC 5405 E0	—	—
250	310	25	AC 5412 E5	—	—	—
260	300	20	AC 5461 E6	—	—	—
280	316	18	AC 5558 E1	—	—	—
280	330	24	AC 5568 E0	—	—	—

Standard Oil Seals

SB Type

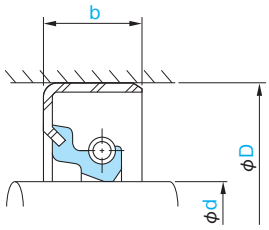

SB type

- The sectional view on the right shows the typical proifle of the seal type.
- Please refer to page 25 for the respective advantages and disadvantages of Types B and C.
- Check the guide to allowable operating conditions on pages 10 and 11 for relevant information on the seal selected before use.
- If there is an "※" at the end of the part number, as this indicates that an SUS spring specification is available, we ask that you refer to the introduction on SUS spring specifications on page 149.

■When ordering, please indicate the NOK part number and the relevant dimensions.

Order Example NOK Part Number: AB 0090 E0

Type: SB, Shaft diametaer: 7, Outside diameter: 20, Width: 7

Dimensions			Part Number			
Shaft diameter d	Outside diameter D	Width b	Nitrile (NBR) shaft diameter of 150 mm or less: A727 shaft diameter over 150 mm: A941	Acrylic (ACM) T303	Silicon (VMQ) S728	Fluorocarbon (FKM) F585
7	20	7	AB 0090 E0	—	—	—
8	18	7	AB 0145 E0	—	—	—
8	18	9	AB 0147 F0	—	—	—
8	22	7	AB 0158 E0	—	—	AB 0158 A3
9	22	7	AB 0205 E0	—	—	—
10	20	7	AB 0260 E0	—	—	—
10	21	8	AB 0267 E0	—	—	—
10	22	8	AB 0271 F0	—	—	—
10	25	7	AB 0279 E0	—	—	AB 0279 A3
10	30	7	AB 0288 E0	—	—	—
11	22	7	AB 0308 E2	—	—	—
12	22	7	AB 0371 E0	—	—	—
12	25	7	AB 0382 E0	—	—	AB 0382 A5
12	28	7	AB 0387 E0	—	—	—
12	30	9	AB 0393 E0	—	—	—
12	32	6	AB 0398 E0	—	—	—
13	25	7	AB 0473 E1	—	—	—
13	28	7	AB 0478 E0	—	—	—
14	24	6	AB 0514 E0	—	—	—
14	28	7	AB 0526 E0	—	—	—
15	24	7	AB 0584 E0	—	—	—
15	25	7	AB 0588 F0	—	—	—
15	28	7	AB 0592 E0	—	—	—
15	30	7	AB 0598 E0	—	—	AB 0598 A4
15	32	7	AB 0603 E0	—	—	—
15	32	9	AB 0604 E0	—	—	—
15	35	7	AB 0610 E0	—	—	—
16	26	7	AB 0678 E0	—	—	—
16	28	7	AB 0685 E0	—	—	—
16	30	7	AB 0687 E0	—	—	AB 0687 A4
16	35	9	AB 0698 E0	—	—	—
17	28	7	AB 0736 F0	—	—	—
17	30	6	AB 0742 G0	—	—	—
17	30	8	AB 0745 G0	—	—	—
17	32	8	AB 0751 E0	—	—	—
17	35	7	AB 0759 E0	—	—	—
17	35	8	—	—	—	AB 0760 A3
17	38	7	AB 0768 E0	—	—	—
17	40	8	AB 0771 E1	—	—	—
18	30	7	AB 0816 E0	—	—	—
18	30	8	AB 0817 E0	—	—	—
18	35	8	AB 0829 E0	—	—	AB 0829 A3
18	35	9	AB 0831 E0	—	—	—
19	30	8	AB 0864 E0	—	—	—
19	38	7	AB 0880 E0	—	—	—

Standard Oil Seals

SB Type

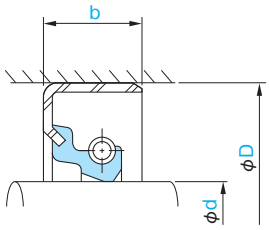

SB type

- The sectional view on the right shows the typical proifle of the seal type.
- Please refer to page 25 for the respective advantages and disadvantages of Types B and C.
- Check the guide to allowable operating conditions on pages 10 and 11 for relevant information on the seal selected before use.
- If there is an "※" at the end of the part number, as this indicates that an SUS spring specification is available, we ask that you refer to the introduction on SUS spring specifications on page 149.

■When ordering, please indicate the NOK part number and the relevant dimensions.

Order Example NOK Part Number: AB 0881 E0

Type: SB, Shaft diametaer: 19, Outside diameter: 38, Width: 10

Dimensions			Part Number			
Shaft diameter d	Outside diameter D	Width b	Nitrile (NBR) shaft diameter of 150 mm or less: A727 shaft diameter over 150 mm: A941	Acrylic (ACM) T303	Silicon (VMQ) S728	Fluorocarbon (FKM) F585
19	38	10	AB 0881 E0	—	—	—
19	40	10	AB 0883 E0	—	—	—
20	30	7	AB 0984 H0	—	—	—
20	30	9	AB 0987 E0	—	—	—
20	32	8	AB 0997 E0	—	—	—
20	35	7	AB 1012 E0	—	—	—
20	35	8	AB 1013 E0	—	—	AB 1013 A3
20	36	7	AB 1017 F0	—	—	—
20	36	10	AB 1019 E0	—	—	—
20	40	7	AB 1029 E0	—	—	—
20	40	8	AB 1030 E3	—	—	—
20	40	10	AB 1032 E0	—	—	—
20	40	11	AB 1033 F0	—	—	AB 1033 A3
20	42	10	AB 1038 E0	—	—	—
20	45	12	AB 1045 E0	—	—	—
21	35	7	AB 1084 E0	—	—	—
22	32	7	AB 1116 E0	—	—	—
22	35	7	AB 1126 E0	—	—	—
22	35	8	AB 1127 E0	—	—	—
22	36	10	AB 1130 E0	—	—	—
22	38	8	AB 1133 E0	—	AB 1133 F0	—
22	40	8	AB 1138 E1	—	—	—
22	40	10	AB 1140 E0	—	—	—
22	42	7	AB 1145 E0	—	—	—
22	42	11	AB 1148 E0	—	—	—
23	42	7	AB 1223 E0	—	—	—
23	42	11	AB 1224 E0	—	—	—
24	38	8	AB 1252 E0	—	—	—
24	38	10	AB 1255 E0	—	—	—
24	40	8	AB 1260 E0	—	—	AB 1260 A4
24	45	7	AB 1265 E0	—	—	—
25	37	8	AB 1302 F0	—	—	—
25	38	7	AB 1306 E0	—	—	—
25	38	8	AB 1307 E0	—	—	—
25	40	8	AB 1314 F0	—	AB 1314 H0	AB 1314 A3
25	40	10	AB 1315 E0	—	—	—
25	42	8	AB 1322 E0	—	—	—
25	45	8	AB 1335 F0	—	—	—
25	45	10	AB 1337 F0	AB 1337 G0	—	—
25	45	11	AB 1338 E0	—	AB 1338 G2	AB 1338 A3
25	47	6	AB 1348 E0	—	—	—
25	47	10	AB 1352 E0	—	—	—
25	50	9	AB 1361 E0	—	—	—
25	50	12	AB 1363 E0	—	—	—
25	52	10	AB 1377 E0	—	—	—

Standard Oil Seals

SB Type

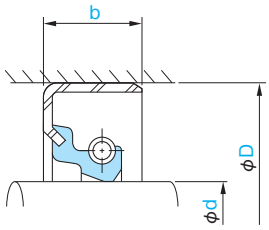

SB type

- The sectional view on the right shows the typical proifle of the seal type.
- Please refer to page 25 for the respective advantages and disadvantages of Types B and C.
- Check the guide to allowable operating conditions on pages 10 and 11 for relevant information on the seal selected before use.
- If there is an "※" at the end of the part number, as this indicates that an SUS spring specification is available, we ask that you refer to the introduction on SUS spring specifications on page 149.

■When ordering, please indicate the NOK part number and the relevant dimensions.

Order Example NOK Part Number: AB 1379 E0

Type: SB, Shaft diametaer: 25, Outside diameter: 52, Width: 12

Dimensions			Part Number			
Shaft diameter d	Outside diameter D	Width b	Nitrile (NBR) shaft diameter of 150 mm or less: A727 shaft diameter over 150 mm: A941	Acrylic (ACM) T303	Silicon (VMQ) S728	Fluorocarbon (FKM) F585
25	52	12	AB 1379 E0	—	—	—
26	36	8	AB 1459 E0	—	—	—
26	38	8	AB 1464 E0	—	—	—
26	40	8	AB 1468 E0	—	—	—
26	42	8	AB 1474 F0	—	—	—
27	40	8	AB 1508 E0	—	—	—
27	43	9	AB 1512 E0	—	—	—
27	47	11	AB 1518 E0	—	—	—
28	38	7	AB 1531 E0	—	—	—
28	38	8	AB 1532 E1	—	—	—
28	40	8	AB 1538 E0	—	—	—
28	42	8	AB 1544 E0	—	—	—
28	44	11	AB 1546 G1	—	—	—
28	45	8	AB 1550 E0	—	—	—
28	48	11	AB 1563 E0	—	—	AB 1563 A3
30	39	7	AB 1651 F0	—	—	—
30	40	7	AB 1656 E0	—	—	—
30	42	8	AB 1666 E0	—	—	—
30	44	9	AB 1673 E0	—	—	—
30	45	8	AB 1679 G0	AB 1679 F0	AB 1679 E1	AB 1679 A3
30	45	9	AB 1680 E0	—	—	—
30	45	12	AB 1682 E0	—	—	—
30	46	9	AB 1689 E0	—	—	—
30	47	8	AB 1692 F0	—	—	—
30	47	10	AB 1693 E0	—	—	—
30	47	12	AB 1695 E0	—	—	—
30	48	8	AB 1700 E0	—	—	—
30	48	11	AB 1702 E0	—	—	—
30	50	7	AB 1704 F0	—	—	—
30	50	8	AB 1705 F0	—	AB 1705 E0	—
30	50	9	AB 1706 E0	—	—	—
30	50	10	AB 1708 E0	—	—	—
30	50	11	AB 1709 G0	—	—	AB 1709 A3
30	52	10	AB 1721 E0	—	—	—
30	55	12	AB 1736 E0	—	—	—
32	43	10	AB 1869 E0	—	—	—
32	44	9	AB 1871 E0	—	—	—
32	45	8	AB 1880 E0	—	—	—
32	46	8	AB 1884 E0	—	—	—
32	47	8	AB 1888 F0	—	—	—
32	48	8	AB 1894 E0	—	—	—
32	52	8	AB 1902 E0	—	—	—
32	52	11	AB 1904 E0	—	—	AB 1904 G1
33	50	7	AB 1933 E0	—	—	—
33	52	7	AB 1937 E0	—	—	—

Standard Oil Seals

SB Type

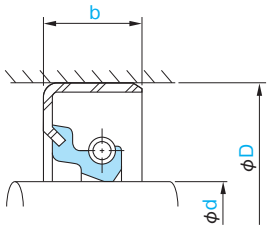

SB type

- The sectional view on the right shows the typical proifle of the seal type.
- Please refer to page 25 for the respective advantages and disadvantages of Types B and C.
- Check the guide to allowable operating conditions on pages 10 and 11 for relevant information on the seal selected before use.
- If there is an "※" at the end of the part number, as this indicates that an SUS spring specification is available, we ask that you refer to the introduction on SUS spring specifications on page 149.

■When ordering, please indicate the NOK part number and the relevant dimensions.

Order Example NOK Part Number: AB 1968 E0

Type: SB, Shaft diametaer: 34, Outside diameter: 48, Width: 8

Dimensions			Part Number			
Shaft diameter d	Outside diameter D	Width b	Nitrile (NBR) shaft diameter of 150 mm or less: A727 shaft diameter over 150 mm: A941	Acrylic (ACM) T303	Silicon (VMQ) S728	Fluorocarbon (FKM) F585
34	48	8	AB 1968 E0	—	—	—
34	54	11	AB 1978 E0	—	—	—
35	47	7	AB 2041 F0	—	—	—
35	48	8	AB 2048 E0	—	—	—
35	50	7	AB 2056 E0	—	AB 2056 I0	—
35	50	8	AB 2057 G0	—	—	AB 2057 A7
35	50	10	AB 2059 E0	—	—	—
35	52	7	AB 2066 E0	—	—	—
35	52	10	AB 2069 E0	—	—	—
35	52	12	AB 2072 F0	—	—	—
35	55	8	AB 2081 E0	—	—	—
35	55	9	AB 2083 F0	—	AB 2083 E0	—
35	55	11	AB 2085 F0	—	AB 2085 H0	AB 2085 A3
35	58	9	AB 2099 E1	—	—	—
35	60	12	AB 2107 F0	—	—	—
35	62	10	AB 2118 E0	—	—	—
36	50	7	AB 2162 E0	—	—	—
36	50	10	AB 2164 E0	—	—	—
38	47	10	AB 7101 E0	—	—	—
38	50	8	AB 2218 E1	—	—	—
38	55	8	AB 2230 E0	—	AB 2230 F0	—
38	55	9	AB 2231 E0	—	—	—
38	58	7	AB 2238 E0	—	—	—
38	58	8	AB 2239 E2	—	—	—
38	58	11	AB 2240 G0	AB 2240 F0	—	AB 2240 A3
38	62	11	AB 2250 E0	—	—	—
40	52	8	AB 2343 E3	—	—	—
40	55	9	AB 2361 G0	—	—	—
40	58	8	AB 2369 F0	AB 2369 G0	—	AB 2369 A3
40	60	8	AB 2375 E0	—	—	—
40	60	10	AB 2377 E0	—	—	—
40	60	12	AB 2379 F0	—	—	—
40	62	7	AB 2385 E0	—	—	—
40	62	8	AB 2386 E0	—	—	—
40	62	11	AB 2388 F0	—	—	AB 2388 A3
40	62	12	AB 2390 H0	—	AB 2390 G2	—
40	65	10	AB 2402 E0	—	—	—
40	65	12	AB 2403 E0	—	—	—
42	55	9	AB 2483 E0	—	—	—
42	60	9	AB 2493 F0	AB 2493 E0	—	—
42	60	12	AB 2495 E0	—	—	—
42	65	9	AB 2504 E0	—	—	—
42	65	12	AB 2507 E0	—	—	AB 2507 A6
43	52	10	BB 2041 E0	—	—	—
44	56	7	AB 2551 E0	—	—	—

Standard Oil Seals

SB Type

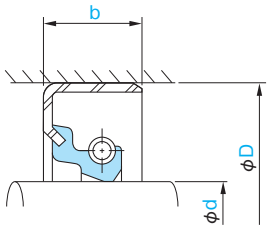

SB type

- The sectional view on the right shows the typical proifle of the seal type.
- Please refer to page 25 for the respective advantages and disadvantages of Types B and C.
- Check the guide to allowable operating conditions on pages 10 and 11 for relevant information on the seal selected before use.
- If there is an "※" at the end of the part number, as this indicates that an SUS spring specification is available, we ask that you refer to the introduction on SUS spring specifications on page 149.

■When ordering, please indicate the NOK part number and the relevant dimensions.

Order Example NOK Part Number: AB 2641 E0

Type: SB, Shaft diametaer: 45, Outside diameter: 60, Width: 7

Dimensions			Part Number			
Shaft diameter d	Outside diameter D	Width b	Nitrile (NBR) shaft diameter of 150 mm or less: A727 shaft diameter over 150 mm: A941	Acrylic (ACM) T303	Silicon (VMQ) S728	Fluorocarbon (FKM) F585
45	60	7	AB 2641 E0	—	—	—
45	60	9	AB 2643 F0	—	—	—
45	61	9	AB 2647 G0	AB 2647 F0	AB 2647 E0	—
45	62	9	AB 2651 F0	—	AB 2651 H0	AB 2651 A3
45	62	10	AB 2652 E0	—	—	—
45	62	12	AB 2653 E0	—	—	—
45	65	10	AB 2658 E0	—	—	—
45	68	9	AB 2666 F0	—	—	—
45	68	12	AB 2668 F0	AB 2668 G0	AB 2668 K3	AB 2668 A5
45	70	14	AB 2677 E0	—	—	—
45	72	12	AB 2685 E0	—	—	—
47	70	12	AB 2735 E0	—	—	—
48	62	9	AB 2775 E0	—	—	—
48	65	9	AB 2780 G0	—	—	—
48	70	9	AB 2788 E0	—	—	—
48	70	12	AB 2791 E0	AB 2791 F0	AB 2791 F1	AB 2791 A3
50	64	10	AB 2834 E0	—	—	—
50	65	9	AB 2838 E0	—	—	—
50	68	9	AB 2847 G0	—	AB 2847 F2	AB 2847 A3
50	70	10	AB 2854 G0	—	AB 2854 E0	—
50	70	12	AB 2857 E0	—	—	—
50	72	9	AB 2861 E0	—	—	—
50	72	10	AB 2862 E0	—	—	—
50	72	12	AB 2864 G0	AB 2864 H0	—	AB 2864 A3
50	74	12	AB 2872 E0	—	—	—
50	80	10	AB 2886 E0	—	—	—
50	80	12	AB 2887 F0	—	—	—
50	80	14	AB 2888 E0	—	—	—
51	62	7	AB 8924 E1	—	—	—
52	70	9	AB 2959 F0	—	—	—
52	75	9	AB 2965 E0	—	—	—
52	75	12	AB 2967 E0	—	—	AB 2967 A3
54	72	12	AB 3014 E1	—	—	—
55	70	9	AB 3036 F0	—	—	—
55	72	9	AB 3040 G0	—	AB 3040 F0	AB 3040 A3
55	78	9	AB 3053 E0	—	—	—
55	78	12	AB 3055 J0	AB 3055 G0	—	AB 3055 A6
55	80	12	AB 3062 E0	—	—	—
55	85	14	AB 3072 F0	—	—	—
56	78	12	AB 3094 E0	—	—	—
58	75	9	AB 3148 E0	—	—	—
58	80	9	AB 3152 G0	—	AB 3152 E0	AB 3152 F0
58	80	12	AB 3154 E0	AB 3154 F0	—	AB 3154 A5
60	75	9	AB 3193 F0	—	—	—
60	75	10	AB 3195 F0	—	—	—

Standard Oil Seals

SB Type

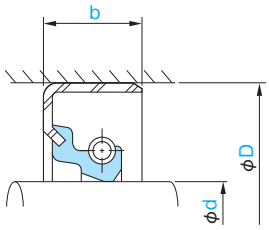

SB type

- The sectional view on the right shows the typical proifle of the seal type.
- Please refer to page 25 for the respective advantages and disadvantages of Types B and C.
- Check the guide to allowable operating conditions on pages 10 and 11 for relevant information on the seal selected before use.
- If there is an "※" at the end of the part number, as this indicates that an SUS spring specification is available, we ask that you refer to the introduction on SUS spring specifications on page 149.

■When ordering, please indicate the NOK part number and the relevant dimensions.

Order Example NOK Part Number: AB 3204 F0
Type: SB, Shaft diametaer: 60, Outside diameter: 78, Width: 9

Dimensions			Part Number			
Shaft diameter d	Outside diameter D	Width b	Nitrile (NBR) shaft diameter of 150 mm or less: A727 shaft diameter over 150 mm: A941	Acrylic (ACM) T303	Silicon (VMQ) S728	Fluorocarbon (FKM) F585
60	78	9	AB 3204 F0	AB 3204 G0	AB 3204 E3	—
60	80	10	AB 3211 E0 ※	—	—	—
60	80	12	AB 3213 E0	—	—	—
60	82	9	AB 3220 E0	—	—	—
60	82	12	AB 3222 G0	AB 3222 H0	AB 3222 I3	AB 3222 A3
60	85	12	AB 3234 E0	—	—	—
60	90	14	AB 3244 E0	—	AB 3244 F1	—
62	80	9	AB 3290 F0	—	—	—
62	85	12	AB 3297 E0	—	—	AB 3297 A3
63	80	9	AB 3316 E0	—	—	—
63	85	9	AB 3320 E0	—	—	—
63	85	12	AB 3321 E1	—	—	—
65	82	10	AB 3389 E0	—	—	—
65	85	12	AB 3395 E0	—	—	—
65	88	12	AB 3400 F0	AB 3400 E1	AB 3400 E0	AB 3400 A3
65	90	10	AB 3406 E0	—	—	—
65	90	13	AB 3409 F0	AB 3409 H0	AB 3409 E0	AB 3409 G1
65	95	14	AB 3414 E0	—	—	—
68	90	12	AB 3459 F0	AB 3459 G0	—	AB 3459 A3
68	95	13	AB 3463 E0	—	AB 3463 F1	—
70	88	12	AB 3505 E0	—	—	—
70	90	10	AB 3512 E0	—	—	—
70	90	12	AB 3513 E0	—	—	—
70	92	12	AB 3519 G0	AB 3519 F1	AB 3519 F2	AB 3519 A3
70	95	13	AB 3527 G0	—	AB 3527 F2	AB 3527 A3
70	100	10	AB 3530 E0	—	—	—
70	100	14	AB 3532 G0	—	AB 3532 E0	—
71	95	13	AB 3549 E0	—	—	—
72	100	12	AB 3562 G0	—	—	AB 3562 F0
75	100	13	AB 3618 H0	AB 3618 A4	AB 3618 A7	AB 3618 A3
75	105	12	AB 3628 E0	—	—	—
75	105	15	AB 3631 E0	—	—	—
80	100	10	AB 3732 E0	—	—	—
80	100	13	AB 3734 E0	—	—	—
80	105	13	AB 3744 H0	AB 3744 A4	AB 3744 F2	AB 3744 A3
80	115	15	AB 3761 F0	AB 3761 E0	—	—
82	105	13	AB 3786 E0	—	—	—
85	105	15	AB 3837 E0	—	—	—
85	110	13	AB 3842 H0	—	—	AB 3842 A3
85	120	15	AB 3855 E0	—	—	—
88	115	13	AB 3879 E0	—	—	—
90	110	13	AB 3921 E0	—	—	—
90	115	13	AB 3932 H0	AB 3932 I0	AB 3932 G8	AB 3932 A5
90	115	15	AB 3934 E0	—	—	—
90	120	13	AB 3938 E0	—	—	—

Standard Oil Seals

SB Type

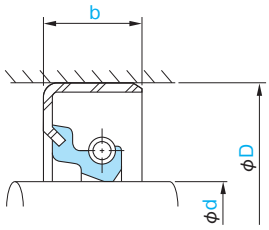

SB type

- The sectional view on the right shows the typical proifle of the seal type.
- Please refer to page 25 for the respective advantages and disadvantages of Types B and C.
- Check the guide to allowable operating conditions on pages 10 and 11 for relevant information on the seal selected before use.
- If there is an "※" at the end of the part number, as this indicates that an SUS spring specification is available, we ask that you refer to the introduction on SUS spring specifications on page 149.

■When ordering, please indicate the NOK part number and the relevant dimensions.

Order Example NOK Part Number: AB 3944 E0

Type: SB, Shaft diametaer: 90, Outside diameter: 125, Width: 15

Dimensions			Part Number			
Shaft diameter d	Outside diameter D	Width b	Nitrile (NBR) shaft diameter of 150 mm or less: A727 shaft diameter over 150 mm: A941	Acrylic (ACM) T303	Silicon (VMQ) S728	Fluorocarbon (FKM) F585
90	125	15	AB 3944 E0	—	AB 3944 F0	—
90	130	13	AB 3948 E0	—	—	—
95	115	13	AB 3984 E0	—	—	—
95	120	13	AB 3994 F0	AB 3994 J0	AB 3994 G2	AB 3994 A3
95	125	14	AB 4000 E0	—	—	—
95	130	15	AB 4007 E0	AB 4007 F0	—	—
98	120	15	AB 4033 E0	—	—	—
100	120	12	AB 4055 E0	—	—	—
100	120	13	AB 4056 E0	—	—	—
100	125	13	AB 4063 A0	AB 4063 F0	AB 4063 E0	AB 4063 E1
100	125	15	AB 4065 E0	—	—	—
100	130	13	AB 4073 E1	—	—	—
100	130	15	AB 4074 E0	—	—	—
105	125	15	AB 4146 E0	—	—	—
105	130	13	AB 4150 E0	—	—	—
105	135	14	AB 4153 E0	AB 4153 G0	AB 4153 F3	AB 4153 A3 ※
105	140	15	AB 4161 E0	—	—	—
110	140	14	AB 4212 E0	AB 4212 F0	AB 4212 G0	AB 4212 A3 ※
110	140	15	AB 4213 E0	—	—	—
110	145	14	AB 4220 E0	—	—	—
110	145	15	AB 4221 E0	AB 4221 G0	AB 4221 F0	—
112	145	14	AB 4237 F0	—	—	—
115	145	14	AB 4282 A0	AB 4282 A1	AB 4282 E1	AB 4282 A3
115	150	16	AB 4292 E0	—	—	—
120	140	13	AB 4330 E1	—	—	—
120	150	14	AB 4346 A0	AB 4346 A5	AB 4346 A2	AB 4346 A3
120	155	16	AB 4355 E0	—	—	—
125	155	14	AB 4399 A0	—	AB 4399 E0	AB 4399 A3
125	160	16	AB 4404 E0	—	—	—
128	153	18	AB 4433 E0	—	—	—
130	160	14	AB 4451 A0	AB 4451 F0	AB 4451 E0	AB 4451 A3
130	160	15	AB 4452 E0	—	—	—
130	160	16	AB 4453 E0	—	—	—
130	170	15	AB 4464 E0	—	—	—
130	170	16	AB 4465 E0	—	—	—
135	165	14	AB 4498 E0	—	AB 4498 F1	AB 4498 A3
135	170	15	AB 4503 E0	—	—	—
140	170	14	AB 4542 A0	AB 4542 E3	AB 4542 E1	AB 4542 A3
140	185	16	AB 4558 E0	—	—	—
145	175	14	AB 4581 A0	AB 4581 A5	AB 4581 A2	AB 4581 A3
145	190	16	AB 4588 E0	—	—	—
150	180	14	AB 4624 A0	AB 4624 F0	AB 4624 E0	AB 4624 A3
150	195	20	AB 4635 E0	—	—	—
155	180	15	AB 4666 E0	—	—	—
155	185	15	AB 4669 E0	—	—	—

Standard Oil Seals

SB Type

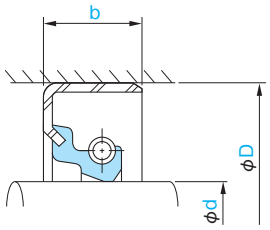

SB type

- The sectional view on the right shows the typical proifle of the seal type.
- Please refer to page 25 for the respective advantages and disadvantages of Types B and C.
- Check the guide to allowable operating conditions on pages 10 and 11 for relevant information on the seal selected before use.
- If there is an "※" at the end of the part number, as this indicates that an SUS spring specification is available, we ask that you refer to the introduction on SUS spring specifications on page 149.

■When ordering, please indicate the NOK part number and the relevant dimensions.

Order Example NOK Part Number: AB 4678 E1

Type: SB, Shaft diametaer: 155, Outside diameter: 200, Width: 20

Dimensions			Part Number			
Shaft diameter d	Outside diameter D	Width b	Nitrile (NBR) shaft diameter of 150 mm or less: A727 shaft diameter over 150 mm: A941	Acrylic (ACM) T303	Silicon (VMQ) S728	Fluorocarbon (FKM) F585
155	200	20	AB 4678 E1	—	—	—
160	190	14	AB 4711 E0	—	—	—
160	190	15	AB 4712 E0	—	—	—
160	190	16	AB 4713 A0	AB 4713 E0	AB 4713 H2	AB 4713 F0
160	200	14	AB 4719 E0	—	—	—
160	200	20	AB 4721 E0	—	—	—
160	210	20	AB 4724 E0	—	—	AB 4724 E1
165	220	20	AB 4753 E0	—	—	—
170	200	16	AB 4795 A0	—	—	AB 4795 A3
170	225	20	AB 4815 E0	—	—	—
175	230	20	AB 4855 E0	—	—	—
180	210	16	AB 4898 A0	—	AB 4898 E2	AB 4898 A6
180	215	16	AB 4904 E0	—	—	—
180	220	15	AB 4908 E1	—	—	—
180	225	20	AB 4913 E0	—	—	—
180	235	20	AB 4915 E2	—	—	—
190	220	14	AB 4974 F0	—	—	—
190	220	15	AB 4975 E0 ※	—	—	—
190	225	16	AB 4983 E0	—	—	AB 4983 A3
190	245	22	AB 4993 E0	—	—	—
200	230	15	AB 5053 P2	—	—	—
200	230	16	AB 5054 G0	—	—	—
200	230	18	AB 5056 E0	—	—	—
200	235	16	AB 5060 E6	—	—	—
200	240	16	AB 5065 E0	—	—	—
200	240	20	AB 5068 A0	—	—	AB 5068 A3
200	255	22	AB 5079 E0	—	—	—
205	260	23	AB 5113 E0	—	—	—
210	240	15	AB 5133 E0	—	—	—
210	250	16	AB 5138 E0	—	—	—
210	250	18	AB 5139 E0	—	—	—
210	250	20	AB 5140 A0	—	—	AB 5140 A3
210	265	23	AB 5146 E0	—	—	—
220	250	15	AB 5204 E0	—	—	—
220	255	16	AB 5207 E0	—	—	—
220	260	22	AB 5216 A0	—	—	AB 5216 A3 ※
220	275	23	AB 5224 E0	—	—	—
230	260	20	AB 5283 A0	—	—	AB 5283 A3 ※
230	285	23	AB 5296 E0	—	—	—
240	280	19	AB 5351 A0	—	—	AB 5351 A3 ※
250	280	15	AB 5398 E7 ※	—	—	—
250	310	25	AB 5412 A0	—	—	AB 5412 A3
260	320	25	AB 5471 A0	—	—	AB 5471 A3
270	330	25	AB 5523 A0	—	—	AB 5523 A3
280	320	18	AB 5560 E0	—	—	—

Standard Oil Seals

SB Type

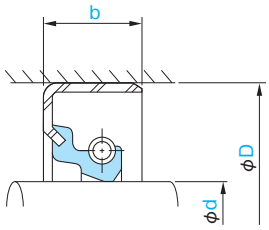

SB type

- The sectional view on the right shows the typical proifle of the seal type.
- Please refer to page 25 for the respective advantages and disadvantages of Types B and C.
- Check the guide to allowable operating conditions on pages 10 and 11 for relevant information on the seal selected before use.
- If there is an "※" at the end of the part number, as this indicates that an SUS spring specification is available, we ask that you refer to the introduction on SUS spring specifications on page 149.

■When ordering, please indicate the NOK part number and the relevant dimensions.

Order Example NOK Part Number: AB 5572 A0

Type: SB, Shaft diametaer: 280, Outside diameter: 340, Width: 28

Dimensions			Part Number			
Shaft diameter d	Outside diameter D	Width b	Nitrile (NBR) shaft diameter of 150 mm or less: A727 shaft diameter over 150 mm: A941	Acrylic (ACM) T303	Silicon (VMQ) S728	Fluorocarbon (FKM) F585
280	340	28	AB 5572 A0	—	—	AB 5572 A3
290	330	18	AB 5586 E0	—	—	—
290	350	25	AB 5597 A0	—	—	—
300	345	22	AB 5631 E0	—	—	—
300	360	25	AB 5640 A0	—	—	AB 5640 A3

Standard Oil Seals

TC Type

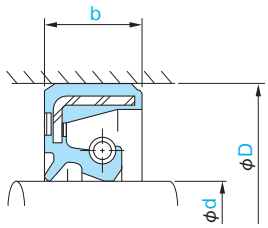

TC type

- The sectional view on the right shows the typical proifle of the seal type.
- Please refer to page 25 for the respective advantages and disadvantages of Types B and C.
- Check the guide to allowable operating conditions on pages 10 and 11 for relevant information on the seal selected before use.
- If there is an "※" at the end of the part number, as this indicates that an SUS spring specification is available, we ask that you refer to the introduction on SUS spring specifications on page 149.

■When ordering, please indicate the NOK part number and the relevant dimensions.

Order Example NOK Part Number: AE 0090 A0
Type: TC, Shaft diametaer: 7, Outside diameter: 20, Width: 7

Dimensions			Part Number			
Shaft diameter d	Outside diameter D	Width b	Nitrile (NBR) shaft diameter of 150 mm or less: A727 shaft diameter over 150 mm: A941	Acrylic (ACM) T303	Silicon (VMQ) S728	Fluorocarbon (FKM) F585
7	20	7	AE 0090 A0	—	—	—
8	22	7	AE 0158 A4	—	AE 0158 A2	AE 0158 F2
8	25	8	AE 0164 E0	—	—	—
8	34	8	AE 0169 E0	—	—	—
9	22	7	AE 0205 A0	AE 0205 E0	—	—
9	28	8	AE 0210 E0	—	—	—
10	20	7	AE 0260 J0 ※	—	—	—
10	25	7	AE 0279 A6 ※	—	AE 0279 A2	—
10	28	8	AE 0285 E0	—	—	—
11	25	7	AE 0311 E0	—	—	—
11	30	10	AE 0315 E0	—	—	—
12	22	7	AE 0371 E0	AE 0371 L0	—	—
12	23	8	AE 0375 E0	—	—	—
12	25	7	AE 0382 A0 ※	—	AE 0382 A2	AE 0382 K1
12	28	7	AE 0387 E0 ※	—	—	—
12	30	9	AE 0393 E0	—	—	—
12	32	7	AE 0399 E1 ※	—	—	—
13	25	7	AE 0473 F0	—	—	—
13	28	7	AE 0478 A0	—	—	—
13	30	8	AE 0483 G0	—	—	—
14	25	7	AE 0519 E0 ※	—	—	—
14	28	7	AE 0526 A0 ※	—	—	AE 0526 F0
14	28	11	AE 0529 E0	—	—	—
14	32	9	AE 0536 E0	—	—	—
15	25	7	AE 0588 K1	—	—	—
15	30	7	AE 0598 A0	AE 0598 A1	—	—
15	30	10	AE 0600 E0	—	—	—
15	32	9	AE 0604 E0	—	—	—
15	35	7	AE 0610 F0	—	—	—
15	35	8	AE 0611 E1 ※	—	—	—
16	26	7	AE 0678 F1	—	—	—
16	28	7	AE 0685 G0	—	—	—
16	30	7	AE 0687 A0 ※	AE 0687 A1	AE 0687 A7	—
16	35	9	AE 0698 E0	—	—	—
17	30	7	AE 0743 E0	—	—	—
17	30	8	AE 0745 E8	—	—	—
17	32	7	AE 0750 E0	—	—	—
17	32	8	AE 0751 H6	—	—	—
17	35	7	AE 0759 E0	—	—	—
17	35	8	AE 0760 H5	—	AE 0760 A2	AE 0760 F0
17	35	10	AE 0761 F0	—	—	—
17	38	7	AE 0768 E0	—	—	—
17	40	9	AE 0772 E1	—	—	—
18	30	8	AE 0817 E0	—	—	—
18	32	7	AE 0823 E0 ※	—	—	—

Standard Oil Seals

TC Type

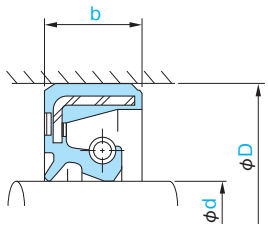

TC type

- The sectional view on the right shows the typical proifle of the seal type.
- Please refer to page 25 for the respective advantages and disadvantages of Types B and C.
- Check the guide to allowable operating conditions on pages 10 and 11 for relevant information on the seal selected before use.
- If there is an "※" at the end of the part number, as this indicates that an SUS spring specification is available, we ask that you refer to the introduction on SUS spring specifications on page 149.

■When ordering, please indicate the NOK part number and the relevant dimensions.

Order Example NOK Part Number: AE 0829 A0
Type: TC, Shaft diametaer: 18, Outside diameter: 35, Width: 8

Dimensions			Part Number			
Shaft diameter d	Outside diameter D	Width b	Nitrile (NBR) shaft diameter of 150 mm or less: A727 shaft diameter over 150 mm: A941	Acrylic (ACM) T303	Silicon (VMQ) S728	Fluorocarbon (FKM) F585
18	35	8	AE 0829 A0	—	AE 0829 A2	—
18	35	9	AE 0831 E0	—	—	—
18	38	7	AE 0838 E0	—	—	—
19	32	8	AE 0870 E0 ※	—	—	—
19	35	7	AE 0874 E1	—	—	—
19	35	8	AE 0875 A0	—	—	—
19	36	7	AE 0879 E0	—	—	—
19	38	7	AE 0880 E0	—	—	—
19	38	10	AE 0881 E0	—	—	—
20	30	7	AE 0984 H0	—	—	—
20	32	6	AE 0995 E0	—	—	—
20	32	8	AE 0997 E0 ※	—	—	—
20	34	7	AE 1003 E2	—	—	—
20	35	7	AE 1012 G0	AE 1012 J0	—	—
20	35	8	AE 1013 A4	AE 1013 E0	AE 1013 A2	AE 1013 F2
20	35	10	AE 1015 F0	—	—	—
20	36	7	AE 1017 F0	—	AE 1017 G1	—
20	37	7	AE 1020 E1	—	—	—
20	37	9	AE 1022 E1	—	—	—
20	37	10	AE 6758 E0	—	—	—
20	38	7	AE 1024 F0	—	—	—
20	40	7	AE 1029 E0	—	—	—
20	40	8	AE 1030 E1 ※	—	—	—
20	40	9	AE 1031 E0	—	—	—
20	40	10	AE 1032 G0	—	—	—
20	40	11	AE 1033 A0	—	—	—
20	42	8	AE 1037 E0	—	—	—
20	44	12	AE 1042 E0	—	—	—
20	45	8	AE 1043 E1	—	—	—
20	45	12	AE 1045 E0	—	—	—
21	38	8	AE 1089 E0	—	—	—
21	40	7	AE 1092 E2	—	—	—
22	35	8	AE 1127 E0	—	—	—
22	38	8	AE 1133 E0	AE 1133 F0	—	—
22	40	9	—	AE 1139 E0	—	—
22	40	11	AE 1141 E0	—	—	—
22	42	7	AE 1145 E0	—	—	—
22	42	10	AE 1147 E0 ※	—	—	—
22	42	11	AE 1148 A5	—	AE 1148 A2	—
23	42	11	AE 1224 A0	—	—	—
24	38	8	AE 1252 E0	—	—	—
24	38	10	AE 1255 E1	—	—	—
24	40	8	AE 1260 A0	AE 1260 A1	—	—
24	45	7	AE 1265 E3	—	—	—
24	45	10	AE 1266 E0	—	—	—

Standard Oil Seals

TC Type

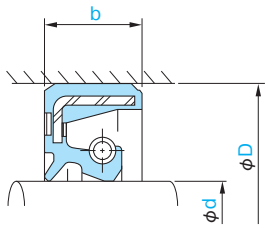

TC type

- The sectional view on the right shows the typical proifle of the seal type.
- Please refer to page 25 for the respective advantages and disadvantages of Types B and C.
- Check the guide to allowable operating conditions on pages 10 and 11 for relevant information on the seal selected before use.
- If there is an "※" at the end of the part number, as this indicates that an SUS spring specification is available, we ask that you refer to the introduction on SUS spring specifications on page 149.

■When ordering, please indicate the NOK part number and the relevant dimensions.

Order Example NOK Part Number: AE 1292 G0
Type: TC, Shaft diametaer: 25, Outside diameter: 35, Width: 6

Dimensions			Part Number			
Shaft diameter d	Outside diameter D	Width b	Nitrile (NBR) shaft diameter of 150 mm or less: A727 shaft diameter over 150 mm: A941	Acrylic (ACM) T303	Silicon (VMQ) S728	Fluorocarbon (FKM) F585
25	35	6	AE 1292 G0	—	—	—
25	38	7	AE 1306 K0 ※	—	—	—
25	38	8	AE 1307 E1	—	—	—
25	40	7	AE 1313 E2	—	—	—
25	40	8	AE 1314 A0 ※	AE 1314 A1	AE 1314 A8	AE 1314 J1 ※
25	40	10	AE 1315 F0	—	—	—
25	42	8	AE 1322 F2	—	—	—
25	42	11	AE 1325 E0	—	—	—
25	45	7	AE 1334 E0	—	—	—
25	45	8	AE 1335 E0 ※	—	—	—
25	45	10	AE 1337 F0	—	—	—
25	45	11	AE 1338 A0	—	AE 1338 A2	AE 1338 G2
25	45	12	AE 1339 E0	—	—	—
25	46	7	AE 1344 E0	—	—	—
25	47	7	AE 1350 E1	—	—	—
25	47	8	AE 1351 E2	—	—	—
25	48	7	AE 1356 E0	—	—	—
25	49	12	AE 1358 E0	—	—	—
25	50	12	AE 1363 E0	—	—	—
25	52	10	AE 1377 F0	—	—	—
26	38	7	AE 1463 E0	—	—	—
26	40	7	AE 1467 E0	—	—	—
26	42	8	AE 1474 A0 ※	AE 1474 A1	—	—
26	48	11	AE 1481 E0	—	—	—
26	52	8	AE 1484 E1	—	—	—
27	42	7	AE 1510 E0	—	—	—
27	47	11	AE 1518 A0	—	—	—
28	40	8	AE 1538 E5	—	—	—
28	42	7	AE 1543 E1	—	—	—
28	42	8	AE 1544 F0	—	—	—
28	44	8	AE 1545 F0	—	—	—
28	44	11	AE 1546 E0	—	—	—
28	45	8	AE 1550 F4	AE 1550 E0	—	—
28	45	11	AE 1553 F0	—	—	—
28	47	7	AE 1557 E1	—	—	—
28	47	8	AE 1558 F0	—	—	—
28	48	8	AE 1562 F1	—	—	—
28	48	11	AE 1563 A0	—	AE 1563 A2	—
29	45	9	AE 1630 E0	—	—	—
30	42	8	AE 1666 F0	—	—	—
30	45	8	AE 1679 A0 ※	AE 1679 A1	AE 1679 A4	—
30	45	11	AE 1681 E1	—	—	—
30	46	7	AE 1688 E0	—	—	—
30	46	9	AE 1689 E1	—	—	—
30	46	10	AE 1690 E0	—	—	—

Standard Oil Seals

TC Type

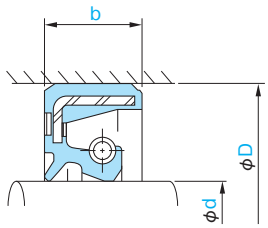

TC type

- The sectional view on the right shows the typical proifle of the seal type.
- Please refer to page 25 for the respective advantages and disadvantages of Types B and C.
- Check the guide to allowable operating conditions on pages 10 and 11 for relevant information on the seal selected before use.
- If there is an "※" at the end of the part number, as this indicates that an SUS spring specification is available, we ask that you refer to the introduction on SUS spring specifications on page 149.

■When ordering, please indicate the NOK part number and the relevant dimensions.

Order Example NOK Part Number: AE 1692 E1

Type: TC, Shaft diametaer: 30, Outside diameter: 47, Width: 8

Dimensions			Part Number			
Shaft diameter d	Outside diameter D	Width b	Nitrile (NBR) shaft diameter of 150 mm or less: A727 shaft diameter over 150 mm: A941	Acrylic (ACM) T303	Silicon (VMQ) S728	Fluorocarbon (FKM) F585
30	47	8	AE 1692 E1	—	—	—
30	47	10	AE 1693 E1	—	—	—
30	48	7	AE 1699 E1	—	—	—
30	48	8	AE 1700 E0	—	—	—
30	48	11	AE 1702 E0	—	—	—
30	50	7	AE 1704 E0 ※	—	—	—
30	50	8	AE 1705 G0	AE 1705 F0	—	—
30	50	11	AE 1709 A0 ※	—	AE 1709 A2	AE 1709 J2
30	50	13	AE 1712 E0	—	—	—
30	52	8	AE 1720 E0	—	—	—
30	52	11	AE 1723 F0	—	—	—
30	52	12	AE 1724 E0	—	—	—
30	55	12	AE 1736 E1	—	—	—
30	55	14	AE 1738 E0	—	—	—
31	45	9	AE 1794 E0	—	—	—
32	48	8	AE 1894 G0 ※	—	—	—
32	50	10	—	AE 1896 E0	—	—
32	52	8	AE 1902 E0	AE 1902 G0	—	—
32	52	11	AE 1904 A0	AE 1904 A1	AE 1904 A7	—
32	54	10	AE 1910 E0	—	—	—
33	50	11	AE 1935 E1	—	—	—
34	52	11	AE 1975 E0	—	—	—
34	54	11	AE 1978 A0	—	—	—
35	48	8	AE 2048 K0	—	—	—
35	50	7	AE 2056 E0 ※	—	—	—
35	50	8	AE 2057 A0 ※	AE 2057 H0	AE 2057 F1	—
35	50	12	AE 2061 E0	—	—	—
35	52	7	AE 2066 E0	—	—	—
35	52	8	AE 2067 E1 ※	—	—	—
35	52	9	AE 2068 E0	—	—	—
35	52	11	AE 2071 F0	—	—	—
35	52	12	AE 2072 E0	—	—	—
35	55	8	AE 2081 E0	—	—	—
35	55	9	AE 2083 E1	—	—	—
35	55	10	AE 2084 E0	—	—	—
35	55	11	AE 2085 A0	AE 2085 A1	AE 2085 Q2	AE 2085 K4
35	55	12	AE 2086 E1	—	—	—
35	60	12	AE 2107 E1	—	—	—
35	60	14	AE 2108 E0	—	—	—
35	62	12	AE 2121 F1	—	—	—
36	58	12	AE 2170 E0	—	—	—
37	53	7	AE 2196 E0	—	—	—
38	50	8	AE 2218 E0	—	—	—
38	55	8	AE 2230 E0	AE 2230 H0	—	—
38	55	9	AE 2231 F0	—	—	—

Standard Oil Seals

TC Type

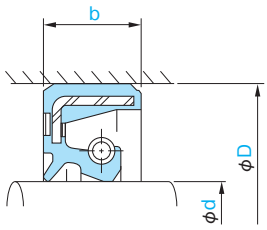

TC type

- The sectional view on the right shows the typical proifle of the seal type.
- Please refer to page 25 for the respective advantages and disadvantages of Types B and C.
- Check the guide to allowable operating conditions on pages 10 and 11 for relevant information on the seal selected before use.
- If there is an "※" at the end of the part number, as this indicates that an SUS spring specification is available, we ask that you refer to the introduction on SUS spring specifications on page 150.

■When ordering, please indicate the NOK part number and the relevant dimensions.

Order Example NOK Part Number: AE 2238 E0
Type: TC, Shaft diametaer: 38, Outside diameter: 58, Width: 7

Dimensions			Part Number			
Shaft diameter d	Outside diameter D	Width b	Nitrile (NBR) shaft diameter of 150 mm or less: A727 shaft diameter over 150 mm: A941	Acrylic (ACM) T303	Silicon (VMQ) S728	Fluorocarbon (FKM) F585
38	58	7	AE 2238 E0	—	—	—
38	58	8	AE 2239 E0	—	—	—
38	58	11	AE 2240 A0	AE 2240 A1	AE 2240 A7	—
38	58	13	AE 2242 E0	—	—	—
38	60	11	AE 2245 E0	—	—	—
38	62	9	AE 2249 E0	—	—	—
38	62	11	AE 2250 E0	—	—	—
40	52	8	AE 2343 E0	—	—	—
40	55	8	AE 2359 H0 ※	—	—	—
40	55	9	AE 2361 E0	—	—	—
40	56	10	AE 2366 E0	—	—	—
40	58	8	AE 2369 A0 ※	AE 2369 A1	AE 2369 A9	—
40	58	12	AE 2372 E0	—	—	—
40	60	12	AE 2379 E0	—	—	—
40	62	8	AE 2386 H1	—	—	—
40	62	11	AE 2388 A0	AE 2388 A1	AE 2388 A6	—
40	62	12	AE 2390 K0 ※	—	—	—
40	63	7	AE 2396 F0 ※	—	—	—
40	64	12	—	AE 2398 E0	—	—
40	65	10	AE 2402 E0	—	—	—
40	65	12	AE 2403 F0	—	—	—
40	65	14	AE 2405 E1	—	—	—
42	55	9	AE 2483 E0	—	—	—
42	60	9	AE 2493 E0	AE 2493 F0	—	—
42	65	9	AE 2504 F0	—	—	—
42	65	12	AE 2507 A0	AE 2507 A1	AE 2507 A2	—
44	60	9	AE 2557 E2	—	—	—
44	62	10	AE 2560 E0	—	—	—
45	60	9	AE 2643 E1 ※	—	—	—
45	62	9	AE 2651 A0 ※	AE 2651 A1	AE 2651 A8	AE 2651 F4
45	68	9	AE 2666 E0	—	—	—
45	68	12	AE 2668 A0	AE 2668 A1	AE 2668 H0	—
45	68	14	AE 2670 E0	—	—	—
45	70	12	AE 2676 E0	—	—	—
45	70	14	AE 2677 E0	—	—	—
45	72	12	AE 2685 H0	—	—	—
46	64	11	AE 2716 E0	—	—	—
48	62	9	AE 2775 E0	—	—	—
48	65	9	AE 2780 F0	—	—	—
48	70	9	AE 2788 H1	—	—	—
48	70	12	AE 2791 A0	AE 2791 A1	AE 2791 A2	—
48	70	14	AE 2793 E0	—	—	—
49	70	11	AE 2808 E0	—	—	—
50	68	9	AE 2847 A0 ※	AE 2847 A7	—	—
50	68	10	AE 2848 G0	—	—	—

Standard Oil Seals

TC Type

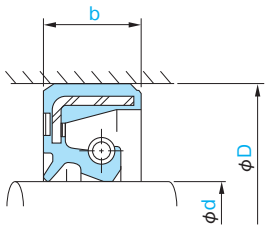

TC type

- The sectional view on the right shows the typical proifle of the seal type.
- Please refer to page 25 for the respective advantages and disadvantages of Types B and C.
- Check the guide to allowable operating conditions on pages 10 and 11 for relevant information on the seal selected before use.
- If there is an "※" at the end of the part number, as this indicates that an SUS spring specification is available, we ask that you refer to the introduction on SUS spring specifications on page 150.

■When ordering, please indicate the NOK part number and the relevant dimensions.

Order Example NOK Part Number: AE 2854 E0
Type: TC, Shaft diametaer: 50, Outside diameter: 70, Width: 10

Dimensions			Part Number			
Shaft diameter d	Outside diameter D	Width b	Nitrile (NBR) shaft diameter of 150 mm or less: A727 shaft diameter over 150 mm: A941	Acrylic (ACM) T303	Silicon (VMQ) S728	Fluorocarbon (FKM) F585
50	70	10	AE 2854 E0	—	—	—
50	70	11	AE 2856 E0	—	—	—
50	70	12	AE 2857 E0	—	—	—
50	72	9	AE 2861 E1 ※	—	—	—
50	72	10	AE 2862 E1 ※	—	—	—
50	72	12	AE 2864 A0 ※	AE 2864 A1	AE 2864 A9	AE 2864 J1
50	80	12	AE 2887 E0	—	—	—
50	80	14	AE 2888 E0	—	—	—
52	70	9	AE 2959 H1	—	AE 2959 E0	—
52	75	9	AE 2965 F1	—	—	—
52	75	12	AE 2967 A0	AE 2967 A1	AE 2967 A2	—
52	75	14	AE 2969 E0	—	—	—
52	78	12	AE 2972 E0	—	—	—
54	70	9	AE 3010 E0	—	—	—
55	72	9	AE 3040 A0 ※	AE 3040 A1	AE 3040 A7	—
55	72	12	AE 3042 E2	—	—	—
55	75	9	AE 3045 E0	—	—	—
55	78	12	AE 3055 A0	AE 3055 A1	AE 3055 A9	AE 3055 E2
55	78	14	AE 3056 E0	—	—	—
55	79	13	AE 3059 E0	—	—	—
55	80	10	AE 3061 E0	—	—	—
55	80	12	AE 3062 E1	—	—	—
55	85	14	AE 3072 F0	—	—	—
56	72	9	AE 3092 E2	—	—	—
56	78	9	AE 3093 E0	—	—	—
56	78	12	AE 3094 E0	—	—	—
57	77	12	—	—	AE 3106 E2	—
58	75	9	AE 3148 F1	—	—	—
58	80	9	AE 3152 E0	—	—	—
58	80	12	AE 3154 A6	AE 3154 A7	—	—
58	90	11	AE 3159 E0	—	—	—
60	75	9	AE 3193 F0	—	—	—
60	78	9	AE 3204 E0	—	—	AE 3204 G2
60	80	12	AE 3213 E5	—	—	—
60	80	13	AE 3215 E0	—	—	—
60	82	9	AE 3220 E0	—	—	—
60	82	12	AE 3222 A0	AE 3222 A1	AE 3222 A2	AE 3222 G0 ※
60	82	14	AE 3224 E0	—	—	—
60	85	12	AE 3234 F2	AE 3234 E0	—	—
60	90	11	AE 3241 E1	—	—	—
60	90	13	AE 3243 E0	—	—	—
60	90	14	AE 3244 E0	—	—	—
62	80	9	AE 3290 E3	—	—	—
62	85	9	AE 3295 E0	—	—	—
62	85	12	AE 3297 A0	AE 3297 A1	—	—

Standard Oil Seals

TC Type

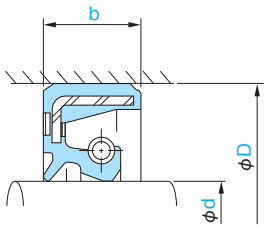

TC type

- The sectional view on the right shows the typical proifle of the seal type.
- Please refer to page 25 for the respective advantages and disadvantages of Types B and C.
- Check the guide to allowable operating conditions on pages 10 and 11 for relevant information on the seal selected before use.
- If there is an "※" at the end of the part number, as this indicates that an SUS spring specification is available, we ask that you refer to the introduction on SUS spring specifications on page 150.

■When ordering, please indicate the NOK part number and the relevant dimensions.

Order Example NOK Part Number: AE 3316 F0
Type: TC, Shaft diametaer: 63, Outside diameter: 80, Width: 9

Dimensions			Part Number			
Shaft diameter d	Outside diameter D	Width b	Nitrile (NBR) shaft diameter of 150 mm or less: A727 shaft diameter over 150 mm: A941	Acrylic (ACM) T303	Silicon (VMQ) S728	Fluorocarbon (FKM) F585
63	80	9	AE 3316 F0	—	—	—
63	85	12	AE 3321 E0	—	—	—
65	88	12	AE 3400 A0	AE 3400 A1	AE 3400 A7	AE 3400 F1
65	88	14	AE 3402 E0	—	—	—
65	90	13	AE 3409 A0	AE 3409 A1	AE 3409 A6	AE 3409 F4 ※
65	95	14	AE 3414 F1	—	—	—
68	90	12	AE 3459 A5	AE 3459 A1	—	—
68	95	13	AE 3463 F0	—	—	AE 3463 E0
70	88	12	AE 3505 F3	—	—	AE 3505 G3
70	90	12	AE 3513 E0	—	—	—
70	92	12	AE 3519 A0	AE 3519 A1	AE 3519 A7	AE 3519 M3
70	92	14	AE 3521 E0	—	—	—
70	95	13	AE 3527 E0	AE 3527 A1	AE 3527A9	—
70	100	13	AE 8520 E2	—	—	—
71	95	13	AE 3549 E0	—	—	—
75	95	13	AE 3611 E0	—	—	—
75	100	13	AE 3618 A0	AE 3618 A1	AE 3618 A2	AE 3618 F3
80	100	12	AE 3733 E0	—	AE 3733 G1	—
80	100	13	AE 3734 E0	AE 3734 F0	—	—
80	105	13	AE 3744 A0 ※	AE 3744 A1	AE 3744 A7	—
80	105	15	AE 3746 F0	—	—	—
80	115	15	AE 3761 E0	—	—	—
85	110	13	AE 3842 A0	AE 3842 A1	AE 3842 F0	—
85	110	15	AE 3844 E0	—	—	—
85	115	15	AE 3852 E0	—	—	—
85	120	15	AE 3855 E0	—	—	—
90	115	13	AE 3932 A9	AE 3932 A1	AE 3932 S1	AE 3932 A6
90	115	15	AE 3934 E0	—	—	—
90	120	13	AE 3938 E0	—	—	—
90	120	15	AE 3939 E0	—	—	—
90	125	15	AE 3944 F0	—	—	—
90	125	17	AE 3945 E0	—	—	—
90	135	15	AE 3951 E0	—	—	—
95	115	13	AE 3984 E0	—	—	—
95	120	13	AE 3994 A0	AE 3994 A1	AE 3994 F1	—
95	120	15	AE 3995 E0	—	—	—
95	130	15	AE 4007 E0	—	—	—
100	125	13	AE 4063 F0 ※	AE 4063 G0	AE 4063 J0	AE 4063 I0
100	125	15	AE 4065 E0	—	—	—
100	135	15	AE 4079 E0	—	—	AE 4079 F1
105	135	14	AE 4153 E0 ※	—	AE 4153 H2	—
105	140	15	AE 4161 E0	—	—	—
110	140	14	AE 4212 H7	AE 4212 F1	—	—
110	145	15	AE 4221 E0	—	—	—
112	145	14	AE 4237 E0	—	—	—

Standard Oil Seals

TC Type

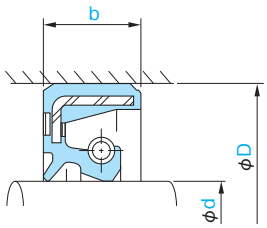

TC type

- The sectional view on the right shows the typical proifle of the seal type.
- Please refer to page 25 for the respective advantages and disadvantages of Types B and C.
- Check the guide to allowable operating conditions on pages 10 and 11 for relevant information on the seal selected before use.
- If there is an "※" at the end of the part number, as this indicates that an SUS spring specification is available, we ask that you refer to the introduction on SUS spring specifications on page 150.

■When ordering, please indicate the NOK part number and the relevant dimensions.

Order Example NOK Part Number: AE 4279 E0

Type: TC, Shaft diametaer: 115, Outside diameter: 140, Width: 15

Dimensions			Part Number			
Shaft diameter d	Outside diameter D	Width b	Nitrile (NBR) shaft diameter of 150 mm or less: A727 shaft diameter over 150 mm: A941	Acrylic (ACM) T303	Silicon (VMQ) S728	Fluorocarbon (FKM) F585
115	140	15	AE 4279 E0	—	—	—
115	145	14	AE 4282 E0	—	—	—
120	150	14	AE 4346 H0	—	—	—
120	155	16	AE 4355 E0	—	—	—
125	155	14	AE 4399 F0	—	AE 4399 I0	—
125	155	16	AE 4400 F0	—	—	—
130	160	14	AE 4451 F0 ※	—	AE 4451 H1	—
135	165	14	AE 4498 E2	—	—	—
140	160	14	AE 4535 G0	—	—	—
140	170	14	AE 4542 E0 ※	—	—	—
140	185	16	AE 4558 E0	—	—	—
145	175	14	AE 4581 E0	—	AE 4581 G0	—
145	190	16	AE 4588 E0	—	—	—
150	180	14	AE 4624 F6	—	—	—
150	180	16	AE 4626 F0	—	—	—
155	180	15	AE 4666 E0	—	—	—
155	200	20	AE 4678 E0	—	—	—
160	190	15	AE 4712 E1	—	—	—
170	200	16	AE 4795 E0 ※	—	—	—
170	205	16	AE 4800 E0	—	—	—
180	210	16	AE 4898 E5	—	—	—
185	210	15	AE 4943 E1	—	—	—
190	225	16	AE 4983 P2	—	—	—
200	230	15	AE 5053 E2 ※	—	—	—
200	240	20	AE 5068 E2	—	—	—
220	250	16	AE 5205 E1	—	—	—
220	255	18	AE 5208 G3	—	—	—
220	275	23	AE 5224 E0	—	—	—
230	270	16	AE 5289 E0	—	—	—
230	270	20	AE 5290 E0	—	—	—
240	270	20	AE 5341 E0	—	—	—
240	275	16	AE 5346 E0	—	—	—

Standard Oil Seals

TB Type

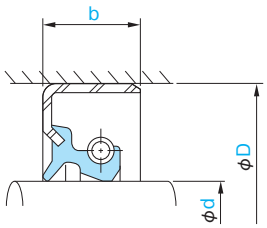

TB type

- The sectional view on the right shows the typical proifle of the seal type.
- Please refer to page 25 for the respective advantages and disadvantages of Types B and C.
- Check the guide to allowable operating conditions on pages 10 and 11 for relevant information on the seal selected before use.
- If there is an "※" at the end of the part number, as this indicates that an SUS spring specification is available, we ask that you refer to the introduction on SUS spring specifications on page 150.

■When ordering, please indicate the NOK part number and the relevant dimensions.

Order Example NOK Part Number: AD 0158 E0
Type: TB, Shaft diametaer: 8, Outside diameter: 22, Width: 7

Dimensions			Part Number			
Shaft diameter d	Outside diameter D	Width b	Nitrile (NBR) shaft diameter of 150 mm or less: A727 shaft diameter over 150 mm: A941	Acrylic (ACM) T303	Silicon (VMQ) S728	Fluorocarbon (FKM) F585
8	22	7	AD 0158 E0	—	—	AD 0158 A3
10	20	7	AD 0260 E1	—	—	—
10	25	7	AD 0279 E0	—	—	AD 0279 A3
12	22	7	AD 0371 E0	—	—	—
12	25	7	AD 0382 E0	—	—	AD 0382 A3
13	25	7	AD 0473 E0	—	—	—
14	28	7	AD 0526 E0	—	—	AD 0526 A4
15	25	7	AD 0588 G0	—	—	—
15	30	7	AD 0598 G0	—	—	AD 0598 A3
15	32	9	AD 0604 E0	—	—	—
16	26	7	AD 0678 F0	—	—	—
16	28	7	AD 0685 F0	—	—	—
16	30	7	AD 0687 H0	—	AD 0687 F1	AD 0687 A3
17	28	6	AD 0735 P0	—	—	—
17	30	8	AD 0745 E1	—	—	—
17	32	8	AD 0751 F0	—	AD 0751 E0	—
17	35	7	AD 0759 E0	—	—	—
17	35	8	AD 0760 E1	—	—	AD 0760 A3
17	38	7	AD 0768 E0	—	—	—
18	32	7	AD 0823 E0	—	—	—
18	35	8	AD 0829 F0	—	—	—
19	35	8	AD 0875 E0	—	—	AD 0875 A3
19	38	7	AD 0880 E0	—	—	—
19	38	10	AD 0881 E0	—	—	—
20	32	8	AD 0997 I1	—	—	—
20	35	7	AD 1012 F2	AD 1012 G0	—	—
20	35	8	AD 1013 E0	—	—	AD 1013 A3
20	35	10	AD 1015 F0	—	—	—
20	36	7	AD 1017 E0	—	—	—
20	40	7	AD 1029 F0	—	—	—
20	40	10	AD 1032 F0	—	—	—
20	40	11	AD 1033 F0	—	—	AD 1033 A3
20	45	12	AD 1045 E0	—	—	—
22	35	8	AD 1127 E0	—	—	—
22	38	8	AD 1133 F1	—	—	—
22	42	7	AD 1145 E0	—	—	—
22	42	10	AD 1147 F0	AD 1147 G0	—	—
22	42	11	AD 1148 F0	—	—	AD 1148 A4
23	42	11	AD 1224 E4	—	—	—
24	38	8	AD 1252 E0	—	—	—
24	40	8	AD 1260 E0	—	—	AD 1260 A3
24	45	10	AD 1266 F0	—	—	—
25	38	7	AD 1306 H1	—	—	—
25	38	8	AD 1307 E0	—	—	—
25	40	7	AD 1313 E3	—	—	—

Standard Oil Seals

TB Type

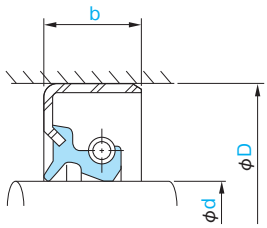

TB type

- The sectional view on the right shows the typical proifle of the seal type.
- Please refer to page 25 for the respective advantages and disadvantages of Types B and C.
- Check the guide to allowable operating conditions on pages 10 and 11 for relevant information on the seal selected before use.
- If there is an "※" at the end of the part number, as this indicates that an SUS spring specification is available, we ask that you refer to the introduction on SUS spring specifications on page 150.

■When ordering, please indicate the NOK part number and the relevant dimensions.

Order Example NOK Part Number: AD 1314 F0
Type: TB, Shaft diametaer: 25, Outside diameter: 40, Width: 8

Dimensions			Part Number			
Shaft diameter d	Outside diameter D	Width b	Nitrile (NBR) shaft diameter of 150 mm or less: A727 shaft diameter over 150 mm: A941	Acrylic (ACM) T303	Silicon (VMQ) S728	Fluorocarbon (FKM) F585
25	40	8	AD 1314 F0	AD 1314 E0	—	AD 1314 A3
25	45	8	AD 1335 E0	—	—	—
25	45	10	AD 1337 G0	AD 1337 H0	—	—
25	45	11	AD 1338 E2	—	—	AD 1338 A3
25	47	8	AD 1351 E1	—	—	—
25	48	7	AD 1356 E0	—	—	—
25	50	14	AD 1364 E0	—	—	—
26	40	7	AD 1467 E0	—	—	—
26	40	8	AD 1468 E0	—	—	—
26	40	9	AD 1469 E0	—	—	—
26	42	8	AD 1474 E0	—	—	—
26	48	11	AD 1481 E0	—	—	—
27	47	11	AD 1518 H0	—	—	—
28	40	8	AD 1538 E0	—	—	—
28	44	8	AD 1545 E0	—	—	—
28	44	11	AD 1546 E0	—	—	—
28	45	8	AD 1550 F0	—	—	—
28	48	8	AD 1562 E0	—	—	—
28	48	11	AD 1563 E0	AD 1563 F0	—	AD 1563 A6
30	42	8	AD 1666 E0	—	—	—
30	44	7	AD 1671 G0	—	—	—
30	45	8	AD 1679 G0	AD 1679 F0	—	AD 1679 A3
30	45	11	AD 1681 E0	—	—	—
30	48	7	AD 1699 E0	—	—	—
30	50	8	AD 1705 E0	—	—	—
30	50	11	AD 1709 E0	AD 1709 F0	—	AD 1709 A3
30	52	8	AD 1720 E0	—	—	—
30	52	11	AD 1723 E0	—	—	—
32	45	8	AD 1880 E0	—	—	—
32	48	8	AD 1894 E0	—	—	—
32	52	8	AD 1902 E1	—	—	—
32	52	11	AD 1904 F0	—	—	AD 1904 A3
33	44	8	AD 1929 F1	—	—	—
34	54	11	AD 1978 E0	—	—	—
35	48	8	AD 2048 F0	—	—	—
35	50	8	AD 2057 G2	AD 2057 F0	—	AD 2057 A5
35	52	7	AD 2066 E0	—	—	—
35	52	11	AD 2071 E1	—	—	—
35	52	12	AD 2072 E0	—	—	—
35	55	8	AD 2081 F0	—	—	—
35	55	9	AD 2083 E0	—	—	—
35	55	11	AD 2085 G0	AD 2085 F0	AD 2085 N1	AD 2085 A3
35	60	12	AD 2107 E0	—	—	—
38	55	8	AD 2230 I0	—	—	—
38	55	9	AD 2231 E0	—	—	—

Standard Oil Seals

TB Type

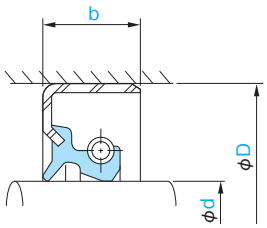

TB type

- The sectional view on the right shows the typical proifle of the seal type.
- Please refer to page 25 for the respective advantages and disadvantages of Types B and C.
- Check the guide to allowable operating conditions on pages 10 and 11 for relevant information on the seal selected before use.
- If there is an "※" at the end of the part number, as this indicates that an SUS spring specification is available, we ask that you refer to the introduction on SUS spring specifications on page 150.

■When ordering, please indicate the NOK part number and the relevant dimensions.

Order Example NOK Part Number: AD 2239 E0
Type: TB, Shaft diametaer: 38, Outside diameter: 58, Width: 8

Dimensions			Part Number			
Shaft diameter d	Outside diameter D	Width b	Nitrile (NBR) shaft diameter of 150 mm or less: A727 shaft diameter over 150 mm: A941	Acrylic (ACM) T303	Silicon (VMQ) S728	Fluorocarbon (FKM) F585
38	58	8	AD 2239 E0	—	—	—
38	58	11	AD 2240 I0	—	—	AD 2240 A3
40	52	8	AD 2343 E0	—	—	—
40	55	8	AD 2359 G0	—	—	AD 2359 H1
40	58	8	AD 2369 F0	—	—	AD 2369 A5
40	60	12	AD 2379 E0	—	—	—
40	62	8	AD 2386 E0	—	—	—
40	62	11	AD 2388 E0	AD 2388 P0	AD 2388 J1	AD 2388 F3
40	62	12	AD 2390 I0	—	—	—
40	65	12	AD 2403 E0	—	—	—
40	65	14	AD 2405 E0	—	—	—
40	68	11	AD 7424 E0	—	—	—
42	60	9	AD 2493 E0	—	—	—
42	65	9	AD 2504 E0	—	—	—
42	65	12	AD 2507 I0	—	AD 2507 K1	AD 2507 A3
45	60	9	AD 2643 G0	—	—	—
45	62	9	AD 2651 G0	AD 2651 F0	—	AD 2651 A3
45	62	12	AD 2653 E0	—	—	—
45	68	9	AD 2666 G1	—	—	—
45	68	12	AD 2668 G0	AD 2668 I0		AD 2668 A4
45	70	12	AD 2676 E0	—	—	—
45	70	14	AD 2677 E0	—	—	—
45	72	12	AD 2685 E0	—	—	—
48	65	9	AD 2780 G0	—	—	—
48	70	9	AD 2788 E0	—	—	—
48	70	12	AD 2791 E0	—	—	AD 2791 A3
50	65	9	AD 2838 F0	—	—	—
50	68	9	AD 2847 F0	—	—	AD 2847 A6
50	70	10	AD 2854 F0	—	—	—
50	72	9	AD 2861 E2	—	—	—
50	72	10	AD 2862 E0	—	—	—
50	72	12	AD 2864 G0	AD 2864 H0	—	AD 2864 A3
50	72	14	AD 2867 F0	—	—	—
50	80	14	AD 2888 F0	—	—	—
52	70	9	AD 2959 F0	—	—	—
52	75	12	AD 2967 E0	—	—	AD 2967 A3
55	72	9	AD 3040 F0	—	—	AD 3040 A6
55	72	12	AD 3042 E0	—	—	—
55	78	9	AD 3053 E0	—	—	—
55	78	12	AD 3055 H0	AD 3055 I0	AD 3055 J2	AD 3055 A3
55	80	12	AD 3062 E0	AD 3062 F0	—	—
55	85	14	AD 3072 E0	—	—	—
56	72	9	AD 3092 E0	—	—	—
56	78	12	AD 3094 E0	—	—	—
58	80	9	AD 3152 E0	—	—	—

Standard Oil Seals

TB Type

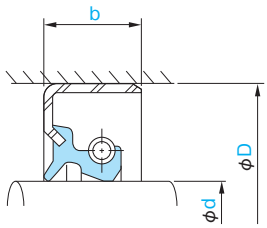

TB type

- The sectional view on the right shows the typical proifle of the seal type.
- Please refer to page 25 for the respective advantages and disadvantages of Types B and C.
- Check the guide to allowable operating conditions on pages 10 and 11 for relevant information on the seal selected before use.
- If there is an "※" at the end of the part number, as this indicates that an SUS spring specification is available, we ask that you refer to the introduction on SUS spring specifications on page 150.

■When ordering, please indicate the NOK part number and the relevant dimensions.

Order Example NOK Part Number: AD 3154 F0
Type: TB, Shaft diametaer: 58, Outside diameter: 80, Width: 12

Dimensions			Part Number			
Shaft diameter d	Outside diameter D	Width b	Nitrile (NBR) shaft diameter of 150 mm or less: A727 shaft diameter over 150 mm: A941	Acrylic (ACM) T303	Silicon (VMQ) S728	Fluorocarbon (FKM) F585
58	80	12	AD 3154 F0	—	—	AD 3154 A3
60	75	9	AD 3193 F0	—	—	—
60	78	9	AD 3204 F0	—	—	—
60	80	12	AD 3213 F0	—	—	—
60	82	9	AD 3220 E0	—	—	—
60	82	12	AD 3222 I0	AD 3222 S0	—	AD 3222 A3
60	82	14	AD 3224 E0	—	—	—
60	90	14	AD 3244 E0	—	—	—
62	80	9	AD 3290 E0	—	—	—
62	85	9	AD 3295 E0	—	—	—
62	85	12	AD 3297 F4	AD 3297 E0	—	—
63	80	9	AD 3316 E0	—	—	—
63	85	12	AD 3321 E2	—	—	—
65	88	12	AD 3400 I0	AD 3400 K0	AD 3400 J2	AD 3400 A3
65	88	14	AD 3402 E0	—	—	—
65	90	13	AD 3409 J0	AD 3409 H0	AD 3409 G1	AD 3409 A5
65	95	16	AD 3415 E0	—	—	—
68	90	12	AD 3459 H0	AD 3459 E0	—	—
68	95	13	AD 3463 E9	—	—	—
70	88	12	AD 3505 H0	—	AD 3505 J1	—
70	92	12	AD 3519 K0	AD 3519 G0	—	AD 3519 A3
70	92	14	AD 3521 G0	—	—	—
70	95	13	AD 3527 H0	AD 3527 G1	AD 3527 G4	AD 3527 A3
70	100	14	AD 3532 E0	—	—	—
71	95	13	AD 3549 E0	—	—	—
72	94	10	BD 1423 E1	—	—	—
75	100	13	AD 3618 I0	AD 3618 J0	AD 3618 G2	AD 3618 A5
75	105	15	AD 3631 F0	—	—	—
75	110	13	AD 3636 E0	—	—	—
78	100	13	AD 3694 E0	—	—	—
80	105	13	AD 3744 J0	AD 3744 H0	AD 3744 F3	AD 3744 A3
80	105	15	AD 3746 E0	—	—	—
80	115	15	AD 3761 E1	—	—	—
85	110	13	AD 3842 I0	AD 3842 H1	AD 3842 G2	AD 3842 A3
85	110	15	AD 3844 F0	—	—	—
85	115	15	AD 3852 E0	—	—	—
85	120	15	AD 3855 E0	—	—	—
90	110	13	AD 3921 E0	—	—	—
90	115	13	AD 3932 J0	AD 3932 I1	AD 3932 G2	AD 3932 H0
90	125	15	AD 3944 E0	—	—	—
90	125	17	AD 3945 E0	AD 3945 F0	—	—
95	120	13	AD 3994 G0 ※	AD 3994 J0	—	AD 3994 A3
95	130	15	AD 4007 E3	—	—	—
95	130	17	AD 4008 E0	—	—	—
100	114	12	AD 7700 E0	—	—	—

Standard Oil Seals

TB Type

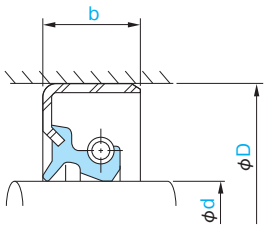

TB type

- The sectional view on the right shows the typical proifle of the seal type.
- Please refer to page 25 for the respective advantages and disadvantages of Types B and C.
- Check the guide to allowable operating conditions on pages 10 and 11 for relevant information on the seal selected before use.
- If there is an "※" at the end of the part number, as this indicates that an SUS spring specification is available, we ask that you refer to the introduction on SUS spring specifications on page 150.

■When ordering, please indicate the NOK part number and the relevant dimensions.

Order Example NOK Part Number: AD 4063 A0

Type: TB, Shaft diametaer: 100, Outside diameter: 125, Width: 13

Dimensions			Part Number			
Shaft diameter d	Outside diameter D	Width b	Nitrile (NBR) shaft diameter of 150 mm or less: A727 shaft diameter over 150 mm: A941	Acrylic (ACM) T303	Silicon (VMQ) S728	Fluorocarbon (FKM) F585
100	125	13	AD 4063 A0	AD 4063 A1	AD 4063 A9	AD 4063 A4
100	125	15	AD 4065 F0	—	—	—
100	130	13	AD 4073 E1	—	—	—
100	135	15	AD 4079 E0	—	—	—
100	135	17	AD 4081 E0	—	—	—
105	135	14	AD 4153 A0 ※	AD 4153 A1	AD 4153 A4	AD 4153 A5
105	135	16	AD 4154 E0	—	—	—
110	140	14	AD 4212 A0 ※	AD 4212 A1	AD 4212 L0	AD 4212 A3
110	140	16	AD 4214 E0	—	—	—
110	145	15	AD 4221 E0	—	—	—
110	145	17	AD 4222 E0	—	—	—
112	145	14	AD 4237 E0	—	—	—
115	145	14	AD 4282 A0	AD 4282 G0	AD 4282 G2	AD 4282 A3
115	145	16	AD 4284 E0	—	—	—
115	150	16	AD 4292 E0	—	—	—
120	150	14	AD 4346 A0	AD 4346 A1	AD 4346 A2 ※	AD 4346 A9 ※
120	150	16	AD 4349 F0	—	—	—
120	155	16	AD 4355 E0	—	—	—
120	155	18	AD 4356 E0	—	—	—
125	155	14	AD 4399 A0	AD 4399 A1	AD 4399 A2	AD 4399 E1
125	155	16	AD 4400 F0	—	—	—
125	160	16	AD 4404 E0	—	—	—
125	160	18	AD 4405 E0	—	—	—
130	160	14	AD 4451 A0 ※	AD 4451 A1	AD 4451 A4	AD 4451 A3
130	160	16	AD 4453 E0	—	—	—
135	160	14	AD 4494 E0	—	—	—
135	165	14	AD 4498 A0	AD 4498 A1	AD 4498 G5	AD 4498 A6
135	175	16	AD 4506 E0 ※	—	—	—
140	170	14	AD 4542 A0	AD 4542 A1	AD 4542 A2	AD 4542 A3
140	180	16	AD 4555 E0	—	—	—
145	175	14	AD 4581 A0	AD 4581 A1	AD 4581 A2	AD 4581 F0
145	175	16	AD 4582 E0	—	—	—
145	176	14	AD 4584 E0	—	—	—
150	180	14	AD 4624 A0	AD 4624 A1	AD 4624 A8	AD 4624 A3
150	180	16	AD 4626 E0	—	—	—
155	200	20	AD 4678 F0	—	—	—
160	190	16	AD 4713 A4	—	—	AD 4713 A9
160	196	20	AD 4718 E0	—	—	
170	200	16	AD 4795 A0	AD 4795 E0	—	AD 4795 A3
170	225	16	—	AD 4814 X0	—	—
170	225	20	AD 4815 F1		—	—
180	210	16	AD 4898 A9	AD 4898 E1	—	AD 4898 A3
180	215	18	AD 4905 E0	—	—	
190	225	16	AD 4983 A9	—	—	AD 4983 A4
200	235	18	AD 5061 X4	AD 5061 X0	—	—

Standard Oil Seals

TB Type

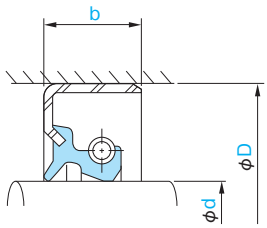

TB type

- The sectional view on the right shows the typical proifle of the seal type.
- Please refer to page 25 for the respective advantages and disadvantages of Types B and C.
- Check the guide to allowable operating conditions on pages 10 and 11 for relevant information on the seal selected before use.
- If there is an "※" at the end of the part number, as this indicates that an SUS spring specification is available, we ask that you refer to the introduction on SUS spring specifications on page 150.

■When ordering, please indicate the NOK part number and the relevant dimensions.

Order Example NOK Part Number: AD 5066 X0

Type: TB, Shaft diametaer: 200, Outside diameter: 240, Width: 17

Dimensions			Part Number			
Shaft diameter d	Outside diameter D	Width b	Nitrile (NBR) shaft diameter of 150 mm or less: A727 shaft diameter over 150 mm: A941	Acrylic (ACM) T303	Silicon (VMQ) S728	Fluorocarbon (FKM) F585
200	240	17	AD 5066 X0	—	—	—
200	240	20	AD 5068 A8	—	—	AD 5068 A3
210	250	16	AD 5138 E0	—	—	—
210	250	20	AD 5140 A5	—	—	AD 5140 A3
210	265	25	—	AD 5147 E2	—	—
220	260	22	AD 5216 A9	—	—	AD 5216 A5
220	275	26	AD 5225 E0	—	—	—
230	260	20	AD 5283 A0 ※	—	—	AD 5283 E0
240	275	18	AD 5347 X3	AD 5347 X0	—	—
240	280	19	AD 5351 A6	—	—	AD 5351 A3
250	285	18	AD 5404 E0	—	—	—
250	310	25	AD 5412 A0	—	—	AD 5412 A3
260	320	25	AD 5471 A0	—	—	AD 5471 A3
270	330	25	AD 5523 A0	—	—	—
280	320	22	AD 5562 E3	—	—	—
280	340	28	AD 5572 A0	—	—	AD 5572 A3
290	350	25	AD 5597 A0	—	—	AD 5597 A3
300	360	25	AD 5640 A6	—	—	AD 5640 A7

Standard Oil Seals

TCK Type

- The sectional view on the right shows the typical proifle of the seal type.
- Check the guide to allowable operating conditions on pages 10 and 11 for relevant information on the seal selected before use.

■When ordering, please indicate the NOK part number and the relevant dimensions.

Order Example NOK Part Number: AE 1033 P0

Type: TCK, Shaft diametaer: 20, Outside diameter: 40, Width: 11

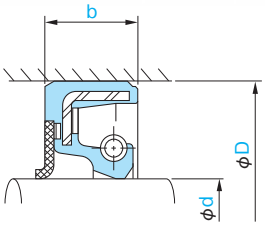

TCK type

Dimensions			Part Number
Shaft diameter d	Outside diameter D	Width b	Nitrile (NBR) + New Fabric A727 + 31FH
20	40	11	AE 1033 P0
25	45	11	AE 1338 S0
30	50	11	AE 1709 P0
35	55	11	AE 2085 V0
40	62	11	AE 2388 Q0
45	68	12	AE 2668 T0
50	72	12	AE 2864 Q0
55	78	12	AE 3055 Q0
60	82	12	AE 3222 Q0
65	88	12	AE 3400 P0
70	95	13	AE 3527 P0
75	100	13	AE 3618 P0
80	105	13	AE 3744 P0
85	110	13	AE 3842 Q0
90	115	13	AE 3932 P0
95	120	13	AE 3994 P0
100	125	13	AE 4063 P0
110	140	14	AE 4212 P0

Standard Oil Seals

VC Type, VB Type

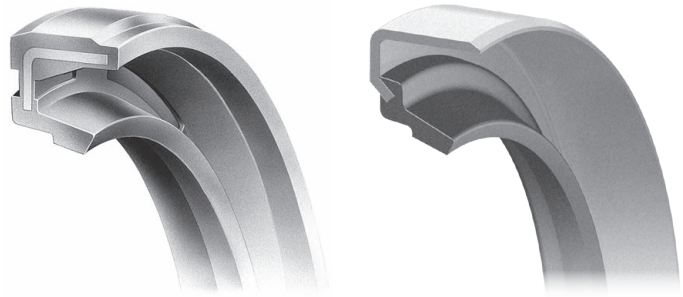

- The sectional view on the right shows the typical proifle of the seal type.
- Please refer to page 25 for the respective advantages and disadvantages of Types B and C.
- Check the guide to allowable operating conditions on pages 10 and 11 for relevant information on the seal selected before use.

■When ordering, please indicate the NOK part number and the relevant dimensions.

Order Example NOK Part Number: AG 0089 A0

Type: VC, Shaft diametaer: 7, Outside diameter: 20, Width: 5

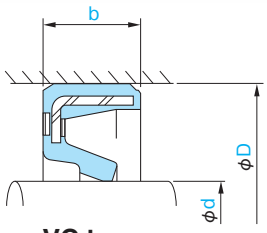

VC type

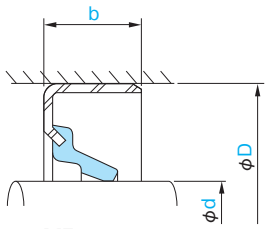

VB type

Dimensions			Part Number	
Shaft diameter d	Outside diameter D	Width b	Nitrile (NBR) shaft diameter of 150 mm or less: A727 shaft diameter over 150 mm: A941	
			VC type	VB type
7	16	6	—	AF 0082 E2
7	20	5	AG 0089 A0	AF 0089 E3
8	14	4	AG 0123 E2	AF 0123 F2
8	18	4	AG 0141 E2	—
8	22	5	AG 0156 A0	—
9	22	5	AG 0204 A0	—
10	20	4	AG 0256 E0	AF 0256 E0
10	25	5	AG 0276 A0	AF 0276 E0
12	22	4	AG 0369 E0	AF 0369 E2
12	25	5	AG 0380 A0	AF 0380 E0
12	30	6	AG 0391 E0	—
12	32	5	AG 0397 E0	—
13	28	5	AG 0477 A0	—
14	24	4	—	AF 0511 F0
14	24	6	AG 0514 E0	AF 0514 E0
14	28	5	AG 0524 A0	AF 0524 E0
14	34	6	AG 0538 E0	—
15	25	4	AG 0585 E0	AF 0585 E0
15	30	4	AG 0595 F0	AF 0595 E0
15	30	5	AG 0596 A0	AF 0596 E0
15	32	6	AG 0602 E0	AF 0602 E0
15	35	6	AG 0608 E0	AF 0608 E0
16	24	4	AG 0668 E0	AF 0668 E0
16	28	4	—	AF 0682 E2
16	30	5	AG 0686 A4	—
17	30	5	—	AF 0741 F1
17	30	7	AG 0743 E0	—
17	32	6	AG 0749 E0	AF 0749 E0
17	35	5	AG 0757 A0	—
18	30	5	—	AF 0814 E0
18	35	6	AG 0827 A0	—
18	38	7	AG 0838 E0	—
19	35	6	AG 0873 A0	AF 0873 E0
19	40	6	—	AF 0882 F0
20	26	6	—	AF 0964 F1
20	32	5	AG 0994 E1	AF 0994 G0
20	34	5	AG 1001 E0	—
20	35	6	AG 1010 A0	AF 1010 F0
20	40	5	AG 1027 A0	AF 1027 E0
20	40	7	AG 1029 E0	—
20	42	6	AG 1035 E0	—
20	47	6	—	AF 1047 E0
22	32	5	—	AF 1113 E2
22	34	5	AG 1119 E0	—
22	35	5	AG 1124 F0	AF 1124 E0

Standard Oil Seals

VC Type, VB Type

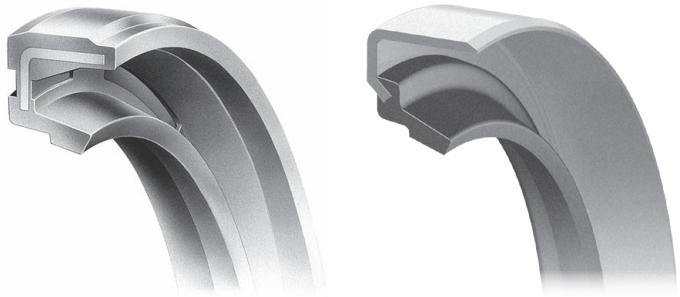

- The sectional view on the right shows the typical proifle of the seal type.
- Please refer to page 25 for the respective advantages and disadvantages of Types B and C.
- Check the guide to allowable operating conditions on pages 10 and 11 for relevant information on the seal selected before use.

■When ordering, please indicate the NOK part number and the relevant dimensions.

Order Example NOK Part Number: AG 1132 E0

Type: VC, Shaft diametaer: 22, Outside diameter: 38, Width: 6

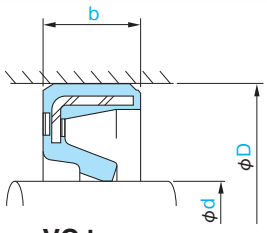

VC type

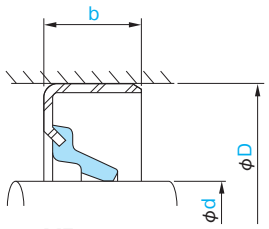

VB type

Dimensions			Part Number	
Shaft diameter d	Outside diameter D	Width b	Nitrile (NBR)	shaft diameter of 150 mm or less: A727 shaft diameter over 150 mm: A941
			VC type	VB type
22	38	6	AG 1132 E0	AF 1132 E0
22	42	5	AG 1144 A0	AF 1144 E0
22	47	7	AG 1161 E0	—
23	32	7	AG 1213 E8	—
23	42	6	AG 1222 A5	—
24	38	5	AG 1250 E0	AF 1250 E0
24	40	6	AG 1258 A0	AF 1258 G0
24	47	5	AG 1268 E0	—
25	35	5	AG 1291 E0	AF 1291 E0
25	38	5	AG 1303 E0	AF 1303 F2
25	40	5	AG 1311 A0	AF 1311 G0
25	40	6	AG 1312 A0	AF 1312 E0
25	41	6	AG 1317 E0	—
25	42	5	AG 1321 E0	—
25	45	5	AG 1333 E0	AF 1333 E0
25	45	7	AG 1334 E0	AF 1334 E0
25	47	5	AG 1347 E0	AF 1347 E0
25	47	6	AG 1348 E1	AF 1348 E0
25	50	5	AG 1359 E1	AF 1359 E0
26	40	5	AG 1466 E0	—
26	42	6	AG 1473 A0	—
26	48	6	AG 1479 E0	AF 1479 E0
27	42	7	AG 1510 E0	—
27	47	8	AG 1517 A0	AF 1517 E0
28	40	5	AG 1535 E0	AF 1535 G0
28	45	6	AG 1548 E0	AF 1548 E0
28	47	5	AG 1556 E0	AF 1556 E0
28	48	5	—	AF 1560 E0
28	48	6	AG 6759 A0	—
28	50	6	AG 1568 E0	AF 1568 F0
30	40	5	AG 1654 E0	AF 1654 E0
30	42	5	AG 1663 F0	AF 1663 E0
30	45	6	AG 1676 A0	AF 1676 E0
30	46	5	AG 1686 E0	AF 1686 E0
30	48	6	AG 1698 E0	—
30	50	5	AG 1703 A0	AF 1703 E0
30	50	8	AG 1705 E0	AF 1705 E0
30	52	5	AG 1717 E0	AF 1717 E0
30	55	5	AG 1731 E0	AF 1731 E0
30	56	5	AG 1741 E0	—
32	45	5	AG 1876 E0	AF 1876 E0
32	48	6	AG 1892 E0	—
32	52	5	AG 1899 A0	AF 1899 E0
34	54	8	AG 6760 A0	—
35	45	5	—	AF 2033 E0

Standard Oil Seals

VC Type, VB Type

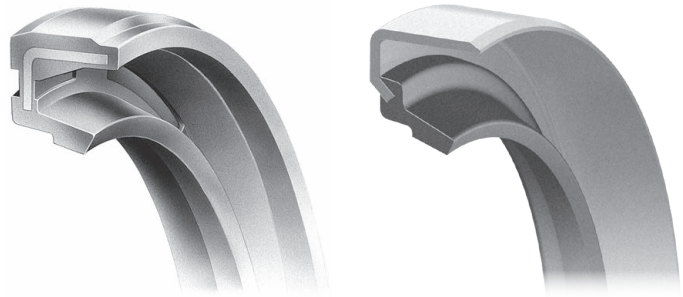

- The sectional view on the right shows the typical proifle of the seal type.
- Please refer to page 25 for the respective advantages and disadvantages of Types B and C.
- Check the guide to allowable operating conditions on pages 10 and 11 for relevant information on the seal selected before use.

■When ordering, please indicate the NOK part number and the relevant dimensions.

Order Example NOK Part Number: AG 2039 E0

Type: VC, Shaft diametaer: 35, Outside diameter: 47, Width: 5

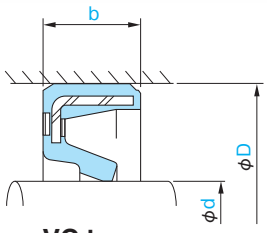

VC type

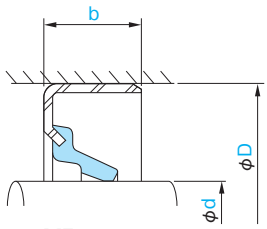

VB type

Dimensions			Part Number	
Shaft diameter d	Outside diameter D	Width b	Nitrile (NBR) shaft diameter of 150 mm or less: A727 shaft diameter over 150 mm: A941	
			VC type	VB type
35	47	5	AG 2039 E0	AF 2039 E0
35	48	5	AG 2044 E1	—
35	50	5	AG 2053 E0	AF 2053 E0
35	50	6	AG 2055 A0	AF 2055 E0
35	52	5	AG 2064 E0	AF 2064 E0
35	55	5	AG 2079 A0	AF 2079 F0
35	55	8	AG 2081 E0	AF 2081 E0
35	60	5	AG 2102 E0	AF 2102 E0
35	62	6	AG 2115 E0	—
38	50	5	—	AF 2215 E0
38	54	6	AG 2228 E0	—
38	55	6	AG 2229 E1	AF 2229 E0
38	58	5	AG 2237 E0	—
38	58	8	AG 2239 A0	AF 2239 E0
38	64	5	—	AF 2253 E0
40	52	5	AG 2340 E0	AF 2340 F0
40	55	5	AG 2357 E1	AF 2357 E0
40	58	6	AG 2367 A0	AF 2367 E0
40	60	5	AG 2373 E0	AF 2373 E0
40	62	5	AG 2382 E0	AF 2382 E3
40	62	6	AG 2383 A0	AF 2383 E0
40	62	8	AG 2386 E0	AF 2386 E0
40	65	5	AG 2399 E0	AF 2399 E0
40	65	6	AG 2400 E0	AF 2400 E0
42	55	6	AG 2480 E1	AF 2480 E0
42	55	7	—	AF 2481 E0
42	60	7	AG 2492 F0	AF 2492 E0
42	65	9	AG 2504 A0	AF 2504 E0
45	60	6	AG 2640 E1	AF 2640 E0
45	62	7	AG 2649 A0	AF 2649 E0
45	65	5	—	AF 2655 E0
45	68	6	AG 2664 A0	AF 2664 E0
45	68	9	AG 2666 A0	AF 2666 E0
45	70	6	AG 2674 E0	—
45	72	6	AG 2682 E0	AF 2682 E0
48	62	6	AG 2772 E0	—
48	62	8	AG 2774 E0	—
48	65	7	AG 2779 E0	AF 2779 E0
48	70	6	AG 2787 A0	AF 2787 E2
50	65	6	AG 2835 E0	AF 2835 E0
50	68	7	AG 2846 A0	AF 2846 E0
50	72	5	AG 2859 E0	—
50	72	6	AG 2860 A0	AF 2860 E0
50	72	9	AG 2861 E0	—
50	80	6	AG 2883 E0	AF 2883 E0

Standard Oil Seals

VC Type, VB Type

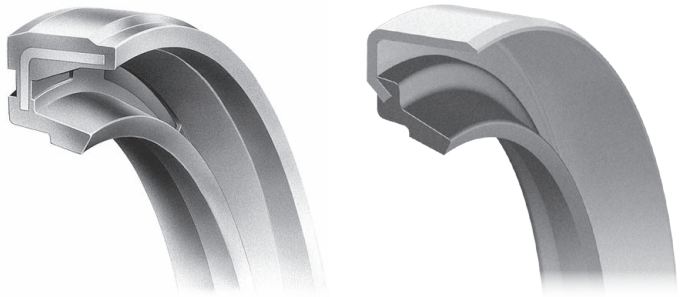

- The sectional view on the right shows the typical proifle of the seal type.
- Please refer to page 25 for the respective advantages and disadvantages of Types B and C.
- Check the guide to allowable operating conditions on pages 10 and 11 for relevant information on the seal selected before use.

■When ordering, please indicate the NOK part number and the relevant dimensions.

Order Example NOK Part Number: AG 2884 E0

Type: VC, Shaft diametaer: 50, Outside diameter: 80, Width: 7

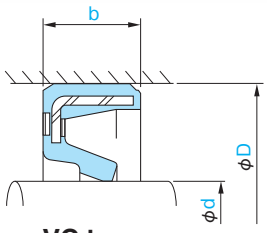

VC type

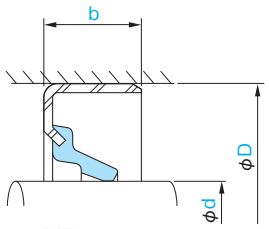

VB type

Dimensions			Part Number	
Shaft diameter d	Outside diameter D	Width b	Nitrile (NBR)	shaft diameter of 150 mm or less: A727 shaft diameter over 150 mm: A941
			VC type	VB type
50	80	7	AG 2884 E0	AF 2884 E0
52	65	6	AG 2954 E0	—
52	70	7	AG 2958 E0	AF 2958 E0
52	75	9	AG 2965 A0	—
55	70	6	AG 3034 E0	AF 3034 E2
55	72	7	AG 3038 A4	AF 3038 E0
55	74	6	—	AF 3044 E0
55	78	9	AG 3053 A0	—
56	70	6	AG 3088 E1	AF 3088 E0
58	72	6	AG 3143 E0	—
58	75	7	AG 3147 E2	AF 3147 E0
58	80	5	—	AF 3150 E0
58	80	6	AG 3151 E0	—
58	80	9	AG 3152 A0	AF 3152 E0
60	75	6	AG 3191 E1	AF 3191 E0
60	78	7	AG 3203 E0	AF 3203 G0
60	82	6	AG 3217 A4	AF 3217 E0
60	82	9	AG 3220 E0	AF 3220 E0
60	85	6	AG 3230 E1	AF 3230 E0
60	90	7	AG 3240 E0	AF 3240 E0
62	75	6	AG 3283 E1	—
62	85	6	AG 3293 A0	AF 3293 E0
63	80	7	AG 3315 E1	AF 3315 F0
65	85	9	AG 3393 E0	—
65	88	5	AG 3397 E3	—
65	88	6	AG 3398 A0	AF 3398 E0
68	90	7	AG 6761 A0	—
70	88	7	AG 3503 E0	—
70	90	10	AG 3512 E1	AF 3512 E0
70	92	5	AG 3515 E0	—
70	92	7	AG 3516 A0	AF 3516 E0
70	92	12	AG 3519 E0	—
70	95	7	AG 6762 A0	—
74	95	7	AG 3584 A0	—
75	100	7	AG 3613 A4	AF 3613 E0
75	100	8	AG 3614 E0	AF 3614 E0
80	95	6	AG 3723 E1	AF 3723 E0
80	100	7	AG 3729 E1	AF 3729 E0
80	105	7	AG 3739 A4	—
80	110	7	AG 3752 E1	—
85	100	9	AG 3830 E0	—
85	105	9	AG 3833 F0	—
85	110	7	AG 3839 A4	—
85	110	8	—	AF 3840 E0
90	115	5	AG 3926 E0	—

Standard Oil Seals

VC Type, VB Type

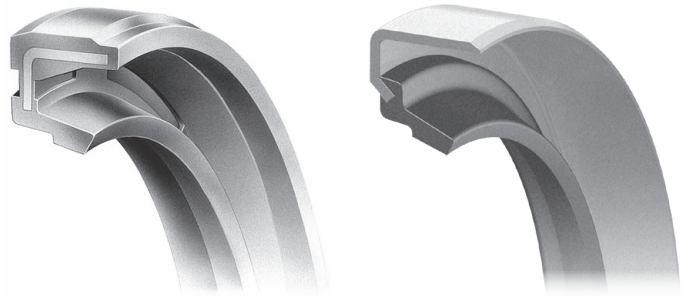

- The sectional view on the right shows the typical proifle of the seal type.
- Please refer to page 25 for the respective advantages and disadvantages of Types B and C.
- Check the guide to allowable operating conditions on pages 10 and 11 for relevant information on the seal selected before use.

■When ordering, please indicate the NOK part number and the relevant dimensions.

Order Example NOK Part Number: AG 3932 F0

Type: VC, Shaft diametaer: 90, Outside diameter: 115, Width: 13

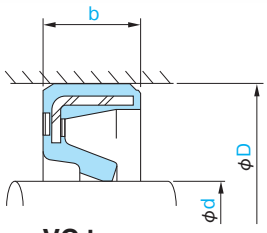

VC type

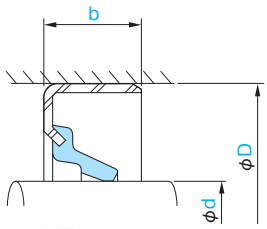

VB type

Dimensions			Part Number	
Shaft diameter d	Outside diameter D	Width b	Nitrile (NBR) shaft diameter of 150 mm or less: A727 shaft diameter over 150 mm: A941	
			VC type	VB type
90	115	13	AG 3932 F0	—
95	115	9	AG 3982 E0	—
95	120	8	AG 3990 E0	AF 3990 E0
95	135	13	AG 4010 E0	—
100	125	8	AG 4059 E0	AF 4059 E1
105	150	12	—	AF 4166 E0
110	140	8	AG 4208 E2	—
110	150	15	—	AF 4225 E0
112	130	7	AG 4233 E0	—
115	135	8	AG 4275 E0	—
115	140	13	—	AF 4278 E0
120	150	14	—	AF 4346 E0
135	165	14	AG 4498 E0	—
140	165	15	—	AF 4539 E0
140	170	10	—	AF 4540 E0
140	170	14	AG 4542 E0	—
165	190	13	—	AF 4736 E1
195	220	15	—	AF 5018 E0
200	230	16	—	AF 5054 E2
220	255	12	AG 5206 E1	—
240	280	15	AG 5349 E0	—

Standard Oil Seals

KC Type, KB Type

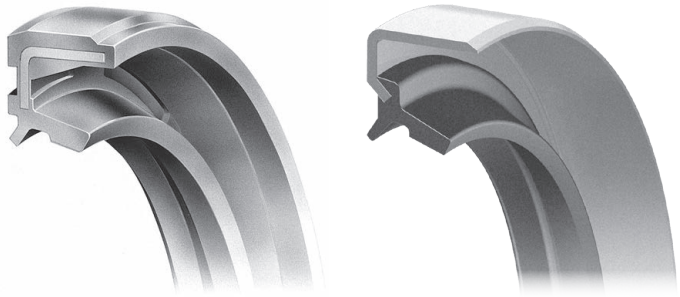

- The sectional view on the right shows the typical proifle of the seal type.
- Please refer to page 25 for the respective advantages and disadvantages of Types B and C.
- Check the guide to allowable operating conditions on pages 10 and 11 for relevant information on the seal selected before use.

■When ordering, please indicate the NOK part number and the relevant dimensions.

Order Example NOK Part Number: AG 0279 E0

Type: KC, Shaft diametaer: 10, Outside diameter: 25, Width: 7

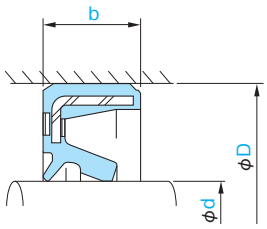

KC type

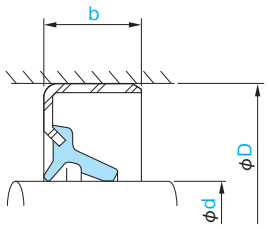

KB type

Dimensions			Part Number	
			Nitrile (NBR) A727	
Shaft diameter d	Outside diameter D	Width b	KC type	KB type
10	25	7	AG 0279 E0	—
15	30	7	AG 0598 E0	—
15	35	7	AG 0610 E0	—
18	28	6	AG 0807 E0	—
20	38	7	AG 1024 E0	—
22	38	8	—	AF 1133 E1
30	45	8	AG 1679 F1	—
32	52	8	—	AF 1902 F0
38	52	6	—	AF 2221 E0
38	55	8	—	AF 2230 E1
40	62	8	AG 2386 F0	—
45	62	6	—	AF 8088 E0
45	62	9	AG 2651 F1	—
48	65	9	—	AF 2780 E0
50	68	9	AG 2847 E0	—
64	82	7	—	AF 3370 E0
65	88	14	AG 3402 E0	—
90	115	13	AG 3932 E0	—

Standard Oil Seals

TCZ Type

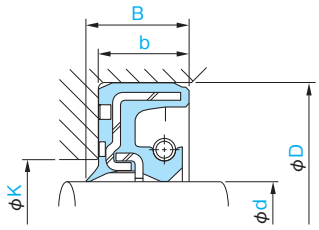

TCZ type

- The sectional view on the right shows the typical proifle of the seal type.
- Check the guide to allowable operating conditions on pages 10 and 11 for relevant information on the seal selected before use.
- If there is an "※" at the end of the part number, as this indicates that an SUS spring specification is available, we ask that you refer to the introduction on SUS spring specifications on page 150.

■When ordering, please indicate the NOK part number and the relevant dimensions.

Order Example NOK Part Number: AP 1031 E0
Type: TCZ, Shaft diametaer: 20, Outside diameter: 40, Width: 9

Dimensions					Part Number	
Shaft diameter d	Outside diameter D	Width b	Total width B	Size of Backup Plate K	Nitrile (NBR) A795	Fluorocarbon (FKM) F548
20	40	9	10.3	24	AP 1031 E0	AP 1031 F0
25	45	9	10.3	29	AP 1336 E0	AP 1336 F0
30	50	9	10.3	34	AP 1706 F0	AP 1706 G0
35	55	9	10.3	39	AP 2083 E0	AP 2083 F0
40	62	9	10.3	44	BP 3590 E0	BP 3590 F0
45	68	9	10.3	49	AP 2666 F0 ※	AP 2666 G0
50	72	9	10.3	54	AP 2861 F0	AP 2861 G0
55	78	9	10.3	59	AP 3053 E0	AP 3053 F0
60	82	9	10.3	64	AP 3220 E0	AP 3220 F0
65	90	9	10.3	69	BP 3054 F0	BP 3054 G0

[Introducing Our TCZ Model]

Our proprietary structural design is this model's key feature!
We have broken new ground by designing an oil seal that can withstand surge pressures of 2.0 MPa!

1. The main lip portion is molded in an integrated manner with a backup metal case to ensure a stable seal under pressurized conditions.
2. Since the main lip portion exhibits minimal deformation even when pressure is applied to it, and since it has been designed to achieve proper pressure distribution, it is capable of maintaining stable sealing properties over the long term.
3. The low-torque design of the dust lip portion allows for long product lifespan.

[Structural diagram]

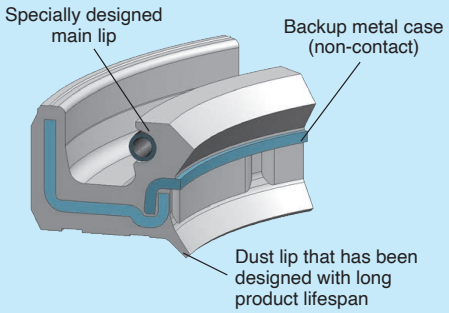

Standard Oil Seals

TCV Type

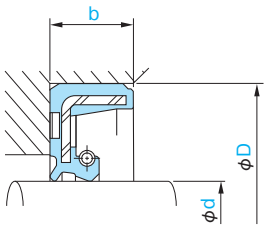

TCV type

- The sectional view on the right shows the typical proifle of the seal type.
- Check the guide to allowable operating conditions on pages 10 and 11 for relevant information on the seal selected before use.
- If there is an "※" at the end of the part number, as this indicates that an SUS spring specification is available, we ask that you refer to the introduction on SUS spring specifications on page 150.

■When ordering, please indicate the NOK part number and the relevant dimensions.

Order Example NOK Part Number: AP 0090 E0
Type: TCV, Shaft diametaer: 7, Outside diameter: 20, Width: 7

Dimensions			Part Number	
Shaft diameter d	Outside diameter D	Width b	Nitrile (NBR) A795	Fluorocarbon (FKM) F548
7	20	7	AP 0090 E0	—
8	18	7	AP 0145 E0 ※	—
8	22	7	AP 0158 F0	—
10	25	7	AP 0279 E0 ※	AP 0279 G1
12	25	7	AP 0382 E0 ※	—
13	28	7	AP 0478 E0	—
14	28	7	AP 0526 F0	—
15	30	7	AP 0598 A0	AP 0598 F3 ※
16	30	7	AP 0687 F0 ※	—
17	35	8	AP 0760 E0	—
18	35	8	AP 0829 E0	—
19	35	8	AP 0875 E0	—
20	32	8	AP 0997 E0	—
20	40	11	AP 1033 A0	AP 1033 H3
22	35	8	AP 1127 E0	—
22	42	11	AP 1148 E0	—
23	42	11	AP 1224 E0	—
24	40	8	AP 1260 E0	—
25	40	8	AP 1314 H0	—
25	45	11	AP 1338 A0	AP 1338 G4
26	42	8	AP 1474 F0 ※	—
27	47	11	AP 1518 F0	—
28	48	11	AP 1563 K0	AP 1563 I2
30	42	7	AP 1665 E0	—
30	50	11	AP 1709 A0 ※	AP 1709 G3
32	52	11	AP 1904 G0	—
34	54	11	AP 1978 F0	—
35	55	11	AP 2085 A0 ※	AP 2085 H2
38	58	11	AP 2240 A0	AP 2240 H2
40	62	11	AP 2388 A0	AP 2388 F2
42	65	12	AP 2507 G0	—
45	68	12	AP 2668 A0	AP 2668 H0
48	70	12	AP 2791 F0	—
50	72	12	AP 2864 A0 ※	AP 2864 J0
52	75	12	AP 2967 F0	—
55	78	12	AP 3055 G0 ※	—
58	80	12	AP 3154 E0	—
60	82	12	AP 3222 G0	—
62	85	12	AP 3297 F0	—

Standard Oil Seals

TCN Type

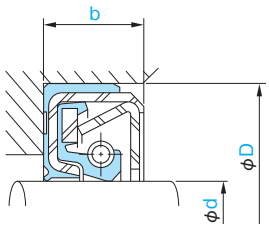

TCN type

- The sectional view on the right shows the typical proifle of the seal type.
- Check the guide to allowable operating conditions on pages 10 and 11 for relevant information on the seal selected before use.

■When ordering, please indicate the NOK part number and the relevant dimensions.

Order Example NOK Part Number: AP 1338 F0
Type: TCN, Shaft diametaer: 25, Outside diameter: 45, Width: 11

Dimensions			Part Number	
Shaft diameter d	Outside diameter D	Width b	Nitrile (NBR) A795	Fluorocarbon (FKM) F548
25	45	11	AP 1338 F0	—
28	48	11	AP 1563 J4	—
30	50	11	AP 1709 H4	—
32	52	11	AP 1904 F3	—
34	54	11	AP 1978 G1	—
35	55	11	AP 2085 G1	—
38	58	11	AP 2240 G4	—
40	62	11	AP 2388 E5	—
42	65	12	AP 2507 H2	—
45	68	12	AP 2668 G4	AP 2668 O2
48	70	12	AP 2791 G0	—
50	72	12	AP 2864 I3	—
55	78	12	AP 3055 F3	AP 3055 H8
60	82	12	AP 3222 B6	AP 3222 H4
62	85	12	AP 3297 G3	—
65	90	13	AP 3409 F1	—
70	95	13	AP 3527 B9	AP 3527 F1
75	100	13	AP 3618 G7	—
80	105	13	AP 3744 K5	AP 3744 J6
85	110	13	AP 3842 H3	—
90	115	13	AP 3932 B7	AP 3932 H3
95	120	13	AP 3994 B7	AP 3994 H0
100	125	13	AP 4063 B0	AP 4063 J1
105	135	14	AP 4153 H0	—
110	140	14	AP 4212 B0	AP 4212 G0
115	145	14	AP 4282 G0	—
120	150	14	AP 4346 B7	AP 4346 H8
125	155	14	AP 4399 E0	—
130	160	14	AP 4451 G3	—
135	165	14	AP 4498 G0	—
140	170	14	AP 4542 F0	—
150	180	14	AP 4624 G0	—
170	200	16	AP 4795 F0	—
190	225	16	AP 4983 E0	—

Standard Oil Seals

TC4 Type
TB4 Type

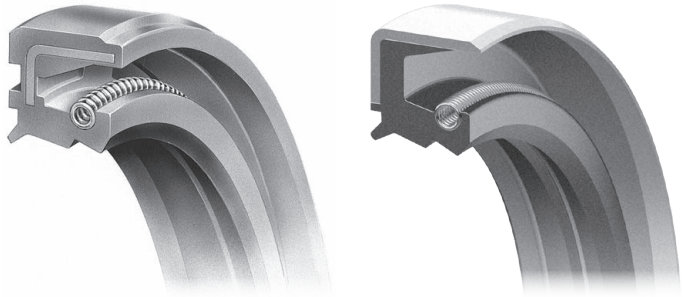

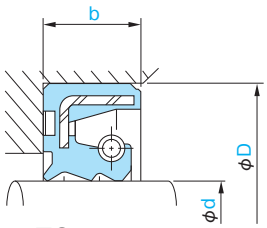

TC4 type

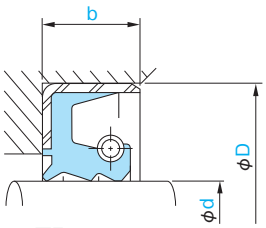

TB4 type

- The sectional view on the right shows the typical proifle of the seal type.
- Please refer to page 25 for the respective advantages and disadvantages of Types B and C.
- Check the guide to allowable operating conditions on pages 10 and 11 for relevant information on the seal selected before use.
- If there is an "※" at the end of the part number, as this indicates that an SUS spring specification is available, we ask that you refer to the introduction on SUS spring specifications on page 150.

■When ordering, please indicate the NOK part number and the relevant dimensions.

Order Example NOK Part Number: AR 0145 F2
Type: TC4, Shaft diametaer: 8, Outside diameter: 18, Width: 7

Dimensions			Part Number	
Shaft diameter d	Outside diameter D	Width b	Nitrile (NBR) A795	
			TC4 type	TB4 type
8	18	7	AR 0145 F2	—
10	20	7	AR 0260 F2	—
12	25	7	AR 0382 E1	—
14	24	7	AR 0515 G0	—
15	30	10	—	AR 0600 E1
16	30	7	—	AR 0687 E5
16	32	10	AR 0693 E1	—
17	38	7	—	AR 0768 E1
18	35	11	AR 0832 E2	—
20	35	7	AR 1012 F3 ※	AR 1012 E2
20	40	10	—	AR 1032 E1
22	38	8	—	AR 1133 E2
22	40	10	AR 1140 E1 ※	—
25	38	7	AR 1306 F0	—
25	40	8	—	AR 1314 E2
25	45	10	—	AR 1337 E8
28	45	8	AR 1550 F1	AR 1550 E1
28	48	11	—	AR 1563 E1
30	50	11	AR 1709 F1	AR 1709 E0
32	52	11	—	AR 1904 E1
35	52	12	—	AR 2072 E2
35	55	11	—	AR 2085 E2
36	52	11	—	AR 2165 E1
38	55	8	AR 2230 E1	—
38	60	12	—	AR 2246 E1
40	55	9	—	AR 2361 E1
40	62	12	AR 2390 H1	AR 2390 E0
45	68	12	AR 2668 F1	AR 2668 E0
48	70	12	AR 2791 E1	AR 2791 F0
50	68	9	AR 2847 E1	—
50	72	12	—	AR 2864 E3
52	75	12	—	AR 2967 E0
55	72	9	—	AR 3040 E3
55	78	12	—	AR 3055 E2
55	80	14	—	AR 3063 E0
60	78	9	—	AR 3204 E1
60	82	12	—	AR 3222 E1
60	82	14	—	AR 3224 E0
65	88	12	—	AR 3400 E0
65	90	14	—	AR 3410 E0

Standard Oil Seals

TC4 Type
TB4 Type

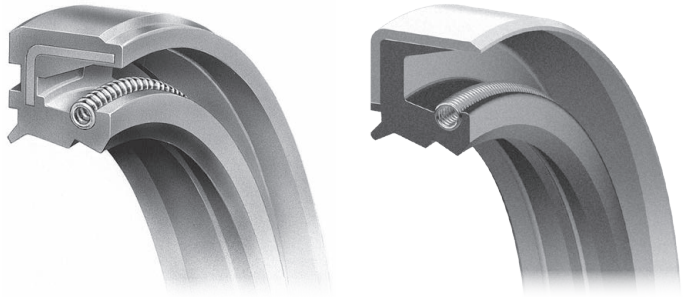

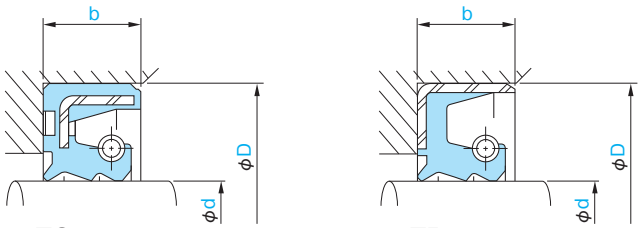

TC4 type　　TB4 type

- The sectional view on the right shows the typical proifle of the seal type.
- Please refer to page 25 for the respective advantages and disadvantages of Types B and C.
- Check the guide to allowable operating conditions on pages 10 and 11 for relevant information on the seal selected before use.
- If there is an "※" at the end of the part number, as this indicates that an SUS spring specification is available, we ask that you refer to the introduction on SUS spring specifications on page 150.

■When ordering, please indicate the NOK part number and the relevant dimensions.

Order Example　NOK Part Number: AR 3463 F1
Type: TB4, Shaft diametaer: 68, Outside diameter: 95, Width: 13

Dimensions			Part Number	
Shaft diameter	Outside diameter	Width	Nitrile (NBR)　A795	
d	D	b	TC4 type	TB4 type
68	95	13	—	AR 3463 F1
70	88	12	—	AR 3505 E1
70	95	14	—	AR 3528 E1
75	95	10	—	AR 3609 E0
75	100	14	—	AR 3619 F1
78	100	13	—	AR 3694 E1
80	100	14	—	AR 3735 E0
80	105	14	—	AR 3745 E1
80	110	13	—	AR 3756 E0
85	110	14	—	AR 3843 E0
90	115	14	—	AR 3933 E0
95	120	13	—	AR 3994 E1
100	125	14	—	AR 4064 E0
105	135	14	—	AR 4153 E1
110	135	14	—	AR 4207 E2
110	140	14	—	AR 4212 E2
120	145	14	—	AR 4336 E1
120	150	14	AR 4346 G1	AR 4346 F1
125	150	14	—	AR 4396 E1
125	155	14	AR 4399 E1	—
130	155	14	—	AR 4445 E0
140	165	14	—	AR 4538 E2
145	175	14	—	AR 4581 E1
150	180	14	AR 4624 F1	AR 4624 G1
160	185	14	—	AR 4708 E0
160	190	14	AR 4711 E1	—
190	215	14	—	AR 4971 E1
220	245	14	—	AR 5201 E0
230	270	20	—	AR 5290 E1
250	290	20	—	AR 5407 E1

General Oil Seals

OC Type

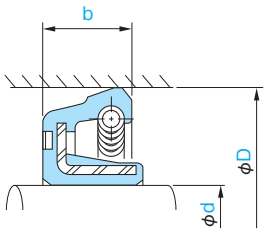

OC type

- The sectional view on the right shows the typical proifle of the seal type.
- Check the guide to allowable operating conditions on pages 12 and 13 for relevant information on the seal selected before use.
- If there is an "※" at the end of the part number, as this indicates that an SUS spring specification is available, we ask that you refer to the introduction on SUS spring specifications on page 150.

■When ordering, please indicate the NOK part number and the relevant dimensions.

Order Example NOK Part Number: AO 1709 E1

Type: OC, Shaft diametaer: 30, Outside diameter: 50, Width: 11

Dimensions			Part Number
Shaft diameter d	Outside diameter D	Width b	Nitrile (NBR) A727
30	50	11	AO 1709 E1
38	58	11	AO 2240 E0
40	62	12	AO 2390 E0
50	72	12	AO 2864 F0
60	82	12	AO 3222 G0
62	85	12	AO 3297 E1
65	88	12	AO 3400 E0
95	120	13	AO 3994 F0 ※
110	140	14	AO 4212 F9
130	160	14	AO 4451 G0
135	165	14	AO 4498 E0
140	170	14	AO 4542 E0
150	180	14	AO 4624 G0

[Reference] For the OC-type oil seal, as the front end of the lip comes into contact with the housing hole inner surface, we have provided information on the hole inner surface and processing methods used for the shaft and its surface roughness on page 42.

General Oil Seals

QLFY Type

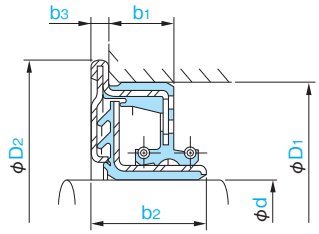

QLFY type

- The sectional view on the right shows the typical proifle of the seal type.
- Check the guide to allowable operating conditions on pages 12 and 13 for relevant information on the seal selected before use.

■When ordering, please indicate the NOK part number and the relevant dimensions.

Order Example NOK Part Number: BQ 2811 E1
Type: QLFY, Shaft diametaer d: 40, Outside diameter D_1: 70, Width b_1: 11, Width b_2: 20

Dimensions						Part Number
Shaft diameter d	Outside diameter		Width			Nitrile (NBR) A571
	D_1	D_2	b_1	b_2	b_3	
40	70	78	11	20	3	BQ 2811 E1
45	70	78	10	19	2.8	BQ 3119 E1
45	78	86	11	20	3	BQ 3068 E1
50	79	87	10.2	19	2.8	BQ 3048 E1
50	90	98	12	21.8	3	BQ 2199 E1
55	82	90	10	19	2.8	BQ 3160 E1
55	88	96	11	20	3	BQ 3138 E1
55	90	98	14	26	3	BQ 3118 E1
60	90	98	11	20	3	AQ 3241 E1
60	100	106	14	26	3	BQ 3139 E1
65	95	102.6	10	19	2.8	BQ 3137 E1

General Oil Seals

VR Type

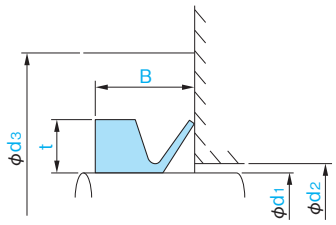

VR type

- The sectional view on the right shows the typical proifle of the seal type.
- Check the guide to allowable operating conditions on pages 12 and 13 for relevant information on the seal selected before use.

Note: This oil seal may be used with shaft diameters in the ranges shown. However, we recommend using it at the recommended nominal shaft diameter (d_1).

■When ordering, please indicate the NOK part number and the relevant dimensions.

Order Example NOK Part Number: BM 1201 A0
Nominal number : VR 3A

Nominal number	Recommended shaft diameter d_1	(See Note) Usable shaft diameter (More than or less than)	Area required for seal: Width B	Maximum diameter d_2	Requeired minimum face diameter d_3	Thick-ness t	Part Number: Nitrile (NBR) A134	Fluorocarbon(FKM) F129
VR 3A	3	2.7～3.5	2.5	d_1+1	d_1+4	1.5	BM 1201 A0	BM 1201 A3
VR 4A	4	3.5～4.5					BM 1202 A0	BM 1202 A3
VR 5A	5	4.5～5.5					BM 1203 A0	BM 1203 A3
VR 6A	6	5.5～6.5	3	d_1+1	d_1+6	2	BM 1204 A0	BM 1204 A3
VR 7A	7	6.5～7.5					BM 1205 A0	BM 1205 A3
VR 8A	8	7.5～8.5					BM 1206 A0	BM 1206 A3
VR 10A	10	9.5～11.5					BM 1207 A0	BM 1207 A3
VR 12A	12	11.5～12.5					BM 1208 A0	BM 1208 A3
VR 13A	13	12.5～13.5					BM 1209 A0	BM 1209 A3
VR 14A	14	13.5～15.5	4.5	d_1+2	d_1+9	3	BM 1210 A0	BM 1210 A3
VR 16A	16	15.5～17.5					BM 1211 A0	BM 1211 A3
VR 18A	18	17.5～19					BM 1212 A0	BM 1212 A3
VR 20A	20	19～21					BM 1213 A0	BM 1213 A3
VR 22A	22	21～24					BM 1214 A0	BM 1214 A3
VR 25A	25	24～27					BM 1215 A0	BM 1215 A3
VR 28A	28	27～29					BM 1216 A0	BM 1216 A3
VR 30A	30	29～31	6	d_1+3	d_1+12	4	BM 1217 A0	BM 1217 A3
VR 32A	32	31～33					BM 1218 A0	BM 1218 A3
VR 35A	35	33～36					BM 1219 A0	BM 1219 A3
VR 38A	37	36～38					BM 1220 A0	BM 1220 A3
VR 40A	40	38～43					BM 1221 A0	BM 1221 A3
VR 45A	45	43～48					BM 1222 A0	BM 1222 A3
VR 50A	50	48～53					BM 1223 A0	BM 1223 A3
VR 55A	55	53～58	7	d_1+3	d_1+15	5	BM 1224 A0	BM 1224 A3
VR 60A	60	58～63					BM 1225 A0	BM 1225 A3
VR 65A	65	63～68					BM 1226 A0	BM 1226 A3
VR 70A	70	68～73					BM 1227 A0	BM 1227 A3
VR 75A	75	73～78					BM 1228 A0	BM 1228 A3
VR 80A	80	78～83					BM 1229 A0	BM 1229 A3
VR 85A	85	83～88	9	d_1+4	d_1+18	6	BM 1230 A0	BM 1230 A3
VR 90A	90	88～93					BM 1231 A0	BM 1231 A3
VR 95A	95	93～98					BM 1232 A0	BM 1232 A3
VR 100A	100	98～105					BM 1233 A0	BM 1233 A3
VR 110A	110	105～115					BM 1234 A0	BM 1234 A3
VR 120A	120	115～125					BM 1235 A0	BM 1235 A3
VR 130A	130	125～135	10.5	d_1+4	d_1+21	7	BM 1236 A0	BM 1236 A3
VR 140A	140	135～145					BM 1237 A0	BM 1237 A3
VR 150A	150	145～155					BM 1238 A0	BM 1238 A3
VR 160A	160	155～165					BM 1239 A0	BM 1239 A3
VR 170A	170	165～175					BM 1240 A0	BM 1240 A3
VR 180A	180	175～185	12	d_1+5	d_1+24	8	BM 1241 A0	BM 1241 A3
VR 190A	190	185～195					BM 1242 A0	BM 1242 A3
VR 199A	199	195～210					BM 1243 A0	BM 1243 A3

General Oil Seals

VR Type

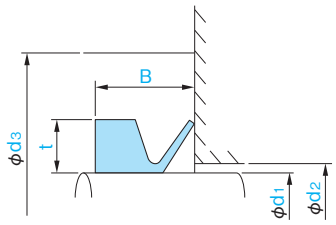

VR type

- The sectional view on the right shows the typical proifle of the seal type.
- Check the guide to allowable operating conditions on pages 12 and 13 for relevant information on the seal selected before use.

Note: This oil seal may be used with shaft diameters in the ranges shown. However, we recommend using it at the recommended nominal shaft diameter (d_1).

■When ordering, please indicate the NOK part number and the relevant dimensions.

Order Example NOK Part Number: BM 1244 A0
Nominal number : VR 200A

Nominal number	Recommended shaft diameter d_1	(See Note) Usable shaft diameter (More than or less than)	Area required for seal: Width B	Maximum diameter d_2	Requeired minimum face diameter d_3	Thick-ness t	Part Number: Nitrile (NBR) A134	Fluorocarbon(FKM) F129
VR 200A	200	190～210					BM 1244 A0	BM 1244 A3
VR 220A	220	210～235					BM 1245 A0	BM 1245 A3
VR 250A	250	235～265					BM 1246 A0	BM 1246 A3
VR 275A	275	265～290					BM 1247 A0	BM 1247 A3
VR 300A	300	290～310					BM 1248 A0	BM 1248 A3
VR 325A	325	310～335					BM 1249 A0	BM 1249 A3
VR 350A	350	335～365					BM 1250 A0	BM 1250 A3
VR 375A	375	365～390					BM 1251 A0	BM 1251 A3
VR 400A	400	390～430					BM 1252 A0	BM 1252 A3
VR 450A	450	430～480					BM 1253 A0	BM 1253 A3
VR 500A	500	480～530					BM 1254 A0	BM 1254 A3
VR 550A	550	530～580					BM 1255 A0	BM 1255 A3
VR 600A	600	580～630					BM 1256 A0	BM 1256 A3
VR 650A	650	630～665					BM 1257 A0	BM 1257 A3
VR 700A	700	665～705					BM 1258 A0	BM 1258 A3
VR 725A	725	705～745					BM 1259 A0	BM 1259 A3
VR 750A	750	745～785					BM 1260 A0	BM 1260 A3
VR 800A	800	785～830					BM 1261 A0	BM 1261 A3
VR 850A	850	830～875					BM 1262 A0	—
VR 900A	900	875～920					BM 1263 A0	BM 1263 A3
VR 950A	950	920～965	20	d_1+10	d_1+45	15	BM 1264 A0	BM 1264 A3
VR1000A	1000	965～1015					BM 1265 A0	BM 1265 A3
VR1050A	1050	1015～1065					BM 1266 A0	BM 1266 A3
VR1100A	1100	1065～1115					BM 1267 A0	BM 1267 A3
VR1150A	1150	1115～1165					BM 1268 A0	—
VR1200A	1200	1165～1215					BM 1269 A0	BM 1269 A3
VR1250A	1250	1215～1270					BM 1270 A0	—
VR1300A	1300	1270～1320					BM 1271 A0	BM 1271 A3
VR1350A	1350	1320～1370					BM 1272 A0	—
VR1400A	1400	1370～1420					BM 1273 A0	BM 1273 A3
VR1450A	1450	1420～1470					BM 1274 A0	BM 1274 A3
VR1500A	1500	1470～1520					BM 1275 A0	—
VR1550A	1550	1520～1570					BM 1276 A0	—
VR1600A	1600	1570～1620					BM 1277 A0	—
VR1650A	1650	1620～1670					BM 1278 A0	—
VR1700A	1700	1670～1720					BM 1279 A0	—
VR1750A	1750	1720～1770					BM 1280 A0	—
VR1800A	1800	1770～1820					BM 1281 A0	—
VR1850A	1850	1820～1870					BM 1282 A0	—
VR1900A	1900	1870～1920					BM 1283 A0	—
VR2000A	2000	1970～2020					BM 1285 A0	BM 1285 A3

General Oil Seals

SBB Type

Large-diameter SB Type

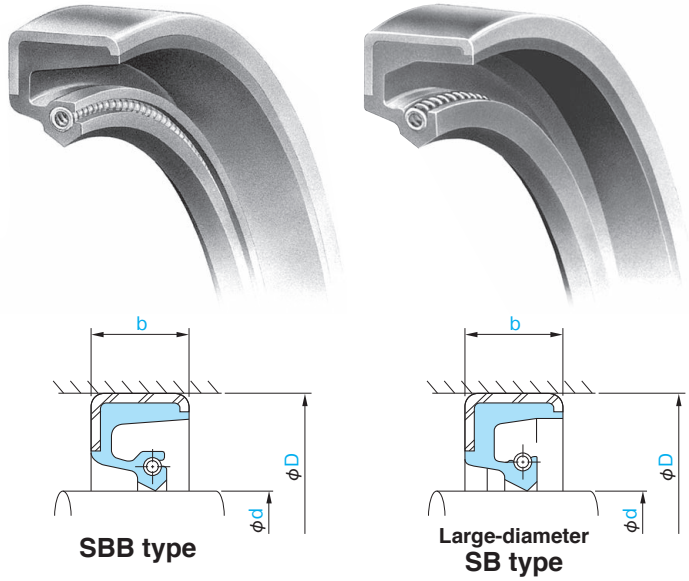

- The sectional view on the right shows the typical proifle of the seal type.
- Check the guide to allowable operating conditions on pages 14 and 15 for relevant information on the seal selected before use.
- If there is an "※" at the end of the part number, as this indicates that an SUS spring specification is available, we ask that you refer to the introduction on SUS spring specifications on page 154.

■When ordering, please indicate the NOK part number and the relevant dimensions.

Order Example NOK Part Number: AB 5660 A0

Type: Large-diameter SB, Shaft diametaer: 305, Outside diameter: 355, Width: 23

Dimensions			Part Number	
Shaft diameter d	Outside diameter D	Width b	Nitrile (NBR) A941	
			SBB type	Large-diameter SB type
305	355	23	—	AB 5660 A0
310	370	25	AB 5675 A0	—
311.15	349.25	17.5	AB 5681 E0	—
315	355.60	16	—	AB 5688 E0
317.50	355.60	23	AB 5702 E0	—
320	358	20	—	AB 5709 E0
320	360	25	AB 5712 A0 ※	—
320	380	25	—	AB 5718 A0
320.68	371.48	25.4	AB 5726 A0	—
325	375	25	—	AB 5737 A0
330	370	20	AB 5746 A0	—
330	390	25	—	AB 5753 A0 ※
340	380	20	—	AB 9104 E0
340	400	25	—	AB 5784 A0
342.90	381.00	17.5	AB 5795 E0	—
350	390	20	AB 5814 E0	—
350	400	25	AB 5817 E0	—
350	410	25	—	AB 5822 E4
360	400	17	AB 5841 A0	—
360	420	25	—	AB 5846 A0
361.95	412.75	22.2	AB 5850 E0	—
365	405	18	—	AB 5855 E0
370	415	20	AB 5866 A0	—
370	430	25	AB 5868 E0	—
375	420	18	—	AB 5876 A5
380	440	25	AB 5888 A0	—
390	430	18	AB 9434 E0	—
390	450	25	—	AB 5909 A0
395	430	18	—	AB 5917 A5

[Special order] When ordering an oil seal with an atached spacer, please indicate the spacer width (H) after the NOK part number.

Order Example: AB 5660 A0 Spacer atached (H=4)

Quantity of spacers

Nominal outside diameter of oil seal	Number of spacers (equallys paced)
500 or less	4
Over 500 to 800 or less	6
Over 800	8

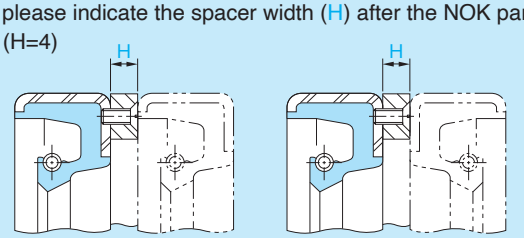

General Oil Seals

SBB Type

Large-diameter SB Type

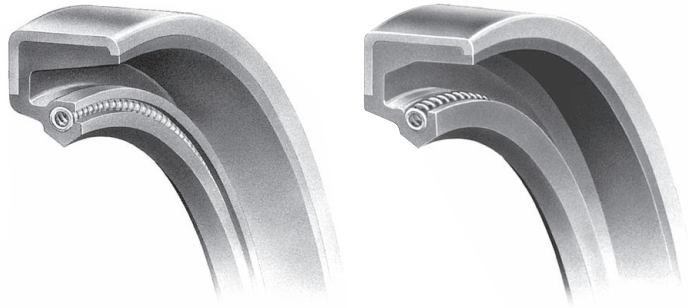

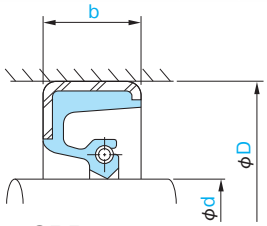

SBB type

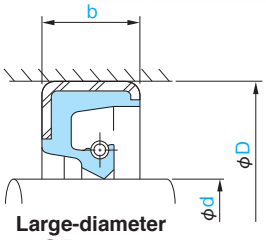

Large-diameter SB type

- The sectional view on the right shows the typical proifle of the seal type.
- Check the guide to allowable operating conditions on pages 14 and 15 for relevant information on the seal selected before use.
- If there is an "※" at the end of the part number, as this indicates that an SUS spring specification is available, we ask that you refer to the introduction on SUS spring specifications on page 154.

■When ordering, please indicate the NOK part number and the relevant dimensions.

Order Example NOK Part Number: AB 9388 E0

Type: Large-diameter SB, Shaft diametaer: 400, Outside diameter: 450, Width: 15.6

Dimensions			Part Number	
			Nitrile (NBR) A941	
Shaft diameter d	Outside diameter D	Width b	SBB type	Large-diameter SB type
400	450	15.6	—	AB 9388 E0
400	460	25	—	AB 5930 A0
400.05	438.15	17.5	AB 5935 E1	—
406.40	457.20	23	AB 5947 E1	—
410	450	20	AB 5952 A0	—
410	470	25	AB 5955 E2	—
415	475	23	—	AB 9406 E1
419.10	457.20	19	AB 5965 E0	—
420	470	20	—	AB 5971 E0
420	480	25	AB 5978 A0	—
430	470	20	AB 5993 A0 ※	—
430	480	25	—	AB 5994 A9 ※
438.15	476.25	19	AB 6014 E0	—
440	480	20	—	AB 6022 E0
440	490	25	—	AB 6025 A0
440	500	25	AB 6026 A0	—
450	480	17.5	—	AB 6046 E0 ※
450	510	25	AB 6057 A0 ※	—
454.02	504.82	19	—	AB 6062 E0
460	520	25	AB 6079 A0	—
469.90	520.70	23	—	AB 6092 E0
470	520	22	—	AB 9444 E0
470	530	25	AB 6096 A0	—
480	530	22	—	AB 6107 E1
480	540	25	—	AB 6111 A0
482.60	520.70	19	AB 6115 E1	—
490	550	25	—	AB 6125 E3
500	540	20	AB 6141 E0	—
500	560	25	AB 6144 A0	—
510	560	25	AB 6159 A0	—

[Special order] When ordering an oil seal with an atached spacer, please indicate the spacer width (H) after the NOK part number.

Order Example: AB 5660 A0 Spacer atached (H=4)

Quantity of spacers

Nominal outside diameter of oil seal	Number of spacers (equallys paced)
500 or less	4
Over 500 to 800 or less	6
Over 800	8

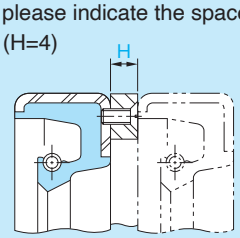

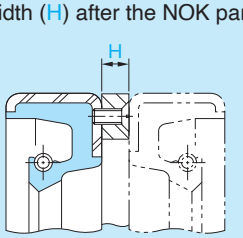

General Oil Seals

SBB Type

Large-diameter SB Type

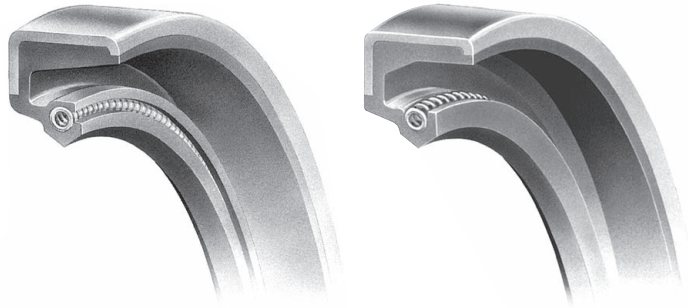

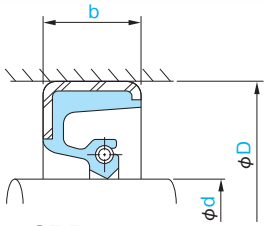

SBB type

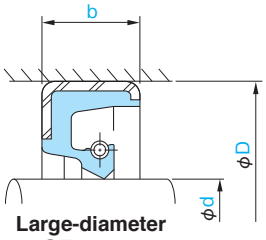

Large-diameter SB type

- The sectional view on the right shows the typical proifle of the seal type.
- Check the guide to allowable operating conditions on pages 14 and 15 for relevant information on the seal selected before use.
- If there is an "※" at the end of the part number, as this indicates that an SUS spring specification is available, we ask that you refer to the introduction on SUS spring specifications on page 154.

■When ordering, please indicate the NOK part number and the relevant dimensions.

Order Example NOK Part Number: AB 6166 A0

Type: SSB, Shaft diametaer: 520, Outside diameter: 560, Width: 20

Dimensions			Part Number	
Shaft diameter d	Outside diameter D	Width b	Nitrile (NBR) A941	
			SBB type	Large-diameter SB type
520	560	20	AB 6166 A0	—
520	580	25	—	AB 6173 A0
520.70	571.50	22.2	AB 6175 E0	—
530	580	22	—	AB 6183 E0
540	590	25	—	AB 6193 A0
546.10	596.90	20.6	AB 6199 E5	—
550	610	25	—	AB 6207 A0
558.80	609.60	22.2	AB 6214 E0	—
560	610	22	AB 6223 A0	—
560	620	25	AB 6226 E0	—
570	620	22	AB 6235 A0	—
570	630	25	AB 6236 A0	—
580	640	25	—	AB 6245 A0
600	660	25	—	AB 6267 A0 ※
610	670	23	AB 6281 A0	—
620	670	25	—	AB 6284 A0
620	680	23	—	AB 9528 E0
622.30	673.10	22.2	—	AB 6288 E0
630	670	20	AB 6292 A0 ※	—
635	685	25	AB 6301 A0	—
640	690	25	—	AB 6303 A0
650	710	25	AB 6313 A0 ※	—
650	720	25	—	AB 6315 A0
660.40	711.20	22.2	AB 6323 E1	—
670	720	25	—	AB 6330 E5
673.10	711.20	19	AB 6335 E0 ※	—
685	745	25	—	AB 9001 E3
685.80	736.60	22.2	—	AB 6340 E0
690	730	20	—	AB 9036 E4
698.50	749.30	22.2	—	AB 6353 E0

[Special order] When ordering an oil seal with an atached spacer, please indicate the spacer width (H) after the NOK part number.

Order Example: AB 5660 A0 Spacer atached (H=4)

Quantity of spacers

Nominal outside diameter of oil seal	Number of spacers (equallys paced)
500 or less	4
Over 500 to 800 or less	6
Over 800	8

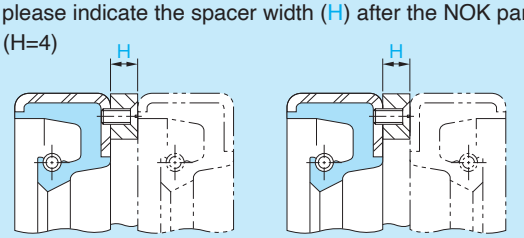

General Oil Seals

SBB Type

Large-diameter SB Type

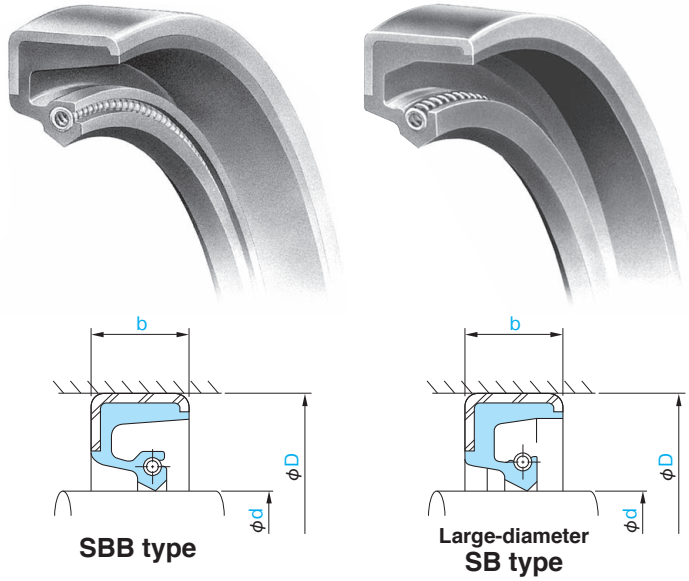

- The sectional view on the right shows the typical proifle of the seal type.
- Check the guide to allowable operating conditions on pages 14 and 15 for relevant information on the seal selected before use.
- If there is an "※" at the end of the part number, as this indicates that an SUS spring specification is available, we ask that you refer to the introduction on SUS spring specifications on page 154.

■When ordering, please indicate the NOK part number and the relevant dimensions.

Order Example NOK Part Number: AB 6356 E7

Type: Large-diameter SB, Shaft diametaer: 700, Outside diameter: 750, Width: 20

Dimensions			Part Number	
			Nitrile (NBR) A941	
Shaft diameter d	Outside diameter D	Width b	SBB type	Large-diameter SB type
700	750	20	—	AB 6356 E7
710	760	25	AB 6366 A0 ※	—
710	770	25	AB 6369 A0	—
711.20	762	22.2	AB 6375 E0	—
720	768	22	—	AB 6384 E0
723.90	774.70	22.2	AB 6388 E0	—
730	790	25	—	AB 6392 A0
735	795	25	—	AB 6394 A0
740	790	25	AB 6398 A0	—
749.30	825.50	22.2	AB 6406 E0	—
750	800	25	—	AB 6407 E5
760	813	22	—	AB 6419 A0
774.70	825.50	22.2	AB 6437 E0	—
780	830	25	—	AB 6446 A0 ※
800	870	25	—	AB 6459 A0 ※
806.45	857.25	22.2	AB 6463 E0	—
810	870	25	—	AB 6465 A0
838.20	889	22.2	—	AB 6483 E0
840	910	25	—	AB 6485 A0
850	900	25	AB 6488 A0	—
850.90	914.40	22.2	AB 6496 E0	—
870	920	25	AB 6507 A0	—
876.30	927.10	22.2	AB 6512 E0	—
882.65	933.45	22.2	—	AB 6515 E2
890	950	25	AB 6519 A0	—
900	950	25	AB 6527 A0	—
914.40	977.90	25.4	—	AB 6535 E0
940	1000	25	AB 6544 A0	—
950	1000	23	—	AB 6546 A9
952.50	1003.30	22.2	AB 6551 E2	—

[Special order] When ordering an oil seal with an atached spacer, please indicate the spacer width (H) after the NOK part number.

Order Example: AB 5660 A0 Spacer atached (H=4)

Quantity of spacers

Nominal outside diameter of oil seal	Number of spacers (equallys paced)
500 or less	4
Over 500 to 800 or less	6
Over 800	8

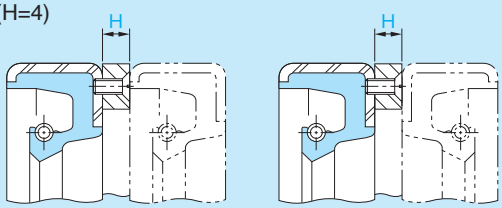

General Oil Seals

SBB Type

Large-diameter SB Type

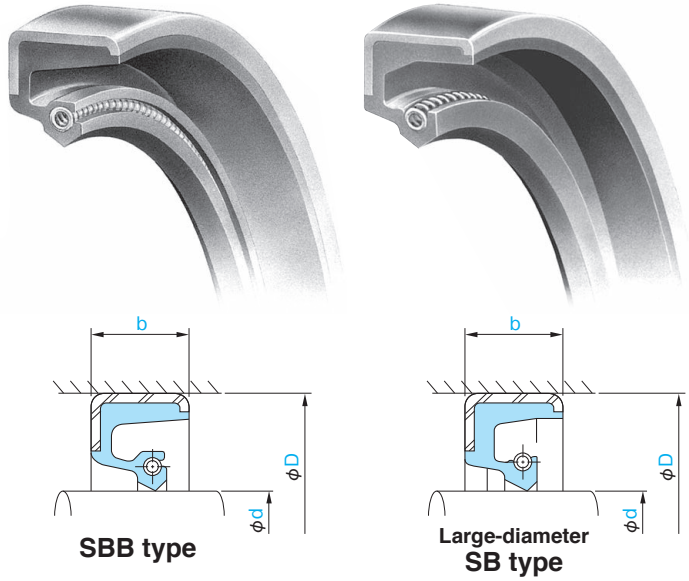

- The sectional view on the right shows the typical proifle of the seal type.
- Check the guide to allowable operating conditions on pages 14 and 15 for relevant information on the seal selected before use.
- If there is an "※" at the end of the part number, as this indicates that an SUS spring specification is available, we ask that you refer to the introduction on SUS spring specifications on page 154.

■When ordering, please indicate the NOK part number and the relevant dimensions.

Order Example NOK Part Number: AB 6553 A0

Type: SSB, Shaft diametaer: 960, Outside diameter: 1020, Width: 25

Dimensions			Part Number	
			Nitrile (NBR) A941	
Shaft diameter d	Outside diameter D	Width b	SBB type	Large-diameter SB type
960	1020	25	AB 6553 A0	—
971.55	1035.05	25	—	AB 6564 E0
1000	1050	23	AB 6576 A0	—
1000	1060	25	AB 6577 E1	—
1020	1070	25	AB 6589 A0	—
1030	1070	25	AB 9707 E3	—
1080	1130	20	AB 9763 E4	—
1092.20	1155.70	22.2	AB 6619 E0	—
1104.90	1155.70	22.2	AB 6624 E1	—
1123.95	1181.10	22.2	—	AB 6631 E0
1136	1186	25	—	AB 6633 E0
1210	1270	20	—	AB 6650 E0
1270	1320	25	—	AB 6662 E0
1330	1400	30	—	AB 9701 E3
1400	1460	25	—	AB 9792 E2
1498.60	1549.40	22.2	—	AB 6681 E0
1670	1720	22.5	—	AB 9795 E0
1820	1890	30	—	AB 9720 E0

[Special order] When ordering an oil seal with an atached spacer, please indicate the spacer width (H) after the NOK part number.

Order Example: AB 5660 A0 Spacer atached (H=4)

Quantity of spacers

Nominal outside diameter of oil seal	Number of spacers (equallys paced)
500 or less	4
Over 500 to 800 or less	6
Over 800	8

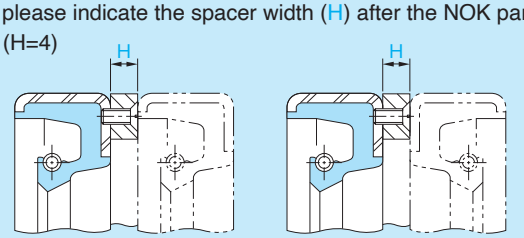

Large-diameter TB Type

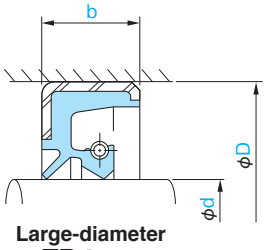

Large-diameter
TB type

- The sectional view on the right shows the typical proifle of the seal type.
- Please refer to page 25 for the respective advantages and disadvantages of Types B and C.
- Check the guide to allowable operating conditions on pages 14 and 15 for relevant information on the seal selected before use.
- If there is an "※" at the end of the part number, as this indicates that an SUS spring specification is available, we ask that you refer to the introduction on SUS spring specifications on page 154.

■When ordering, please indicate the NOK part number and the relevant dimensions.

Order Example NOK Part Number: AD 5676 A0
Type: Large-diameter TB, Shaft diametaer: 310, Outside diameter: 370, Width: 28

Dimensions			Part Number
Shaft diameter d	Outside diameter D	Width b	Nitrile (NBR) A941
310	370	28	AD 5676 A0
320	360	20	AD 5711 A4
320	380	28	AD 5720 A0
325	365	25	AD 5734 E2
330	370	25	AD 5747 E1
330	390	28	AD 5754 A0
340	400	28	AD 5785 A0
350	410	28	AD 5823 A0
360	400	25	AD 5843 E1
360	420	28	AD 5847 A0
370	415	20	AD 5866 E0
370	430	28	AD 5869 A0
380	440	28	AD 5889 A0
390	440	25	AD 5908 A0
390	450	28	AD 5910 A0
400	460	28	AD 5931 A0
410	470	28	AD 5956 A0
420	480	28	AD 5979 A0
425	475	22	AD 5984 E0 ※
430	470	20	AD 5993 A0
430	480	25	AD 5994 A0
440	500	25	AD 6026 E0
450	500	25	AD 6055 A0
450	510	28	AD 6058 A0
465	510	20	AD 6085 E0
480	540	28	AD 6112 E0
490	550	28	AD 6126 E0
500	560	28	AD 6145 A0
540	600	25	AD 6195 A0
550	610	28	AD 6208 A4
560	620	30	AD 6227 E0
580	640	30	AD 6246 E2
600	650	25	AD 6263 E1
640	690	25	AD 6303 E1
660	740	45	AD 6322 E1
710	770	30	AD 9651 E1
810	870	25	AD 6465 E1
820	900	35	AD 6471 E1

General Oil Seals

MG Type

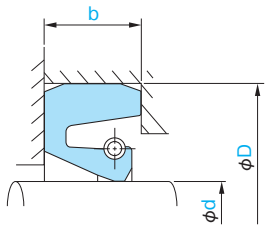

MG type

- The sectional view on the right shows the typical proifle of the seal type.
- Check the guide to allowable operating conditions on pages 12 and 13 for relevant information on the seal selected before use.
- When there is not designation, I send it without a cut. Please refer to page 52 for the cutting methods. If you wish to select a product with a cut in 1 location, we can provide you with a separate quote for such orders.
- If there is an "※" at the end of the part number, as this indicates that an SUS spring specification is available, we ask that you refer to the introduction on SUS spring specifications on page 154.

■When ordering, please indicate the NOK part number and the relevant dimensions.

Order Example NOK Part Number: AM 0759 E1

Type: MG, Shaft diametaer: 17, Outside diameter: 35, Width: 7

Dimensions			Part Number
Shaft diameter d	Outside diameter D	Width b	Nitrile (NBR) A103 (Press-fit Area: A992) A104 (Press-fit Area: A104)★
17	35	7	AM 0759 E1
20	44	12	AM 1042 A0
22	42	12	AM 1149 A0
25	45	11	AM 1338 A0
25	50	10	AM 1362 E1
30	54	12	AM 1728 A0
32	52	11	AM 1904 A0
35	59	12	AM 2101 E0
35	60	12	AM 2107 A0
36	58	10	AM 2169 A5
38	60	12	AM 2246 E1
40	62	12	AM 2390 E0
40	65	12	AM 2403 A0
40	67	14	AM 2413 E0
42	66	12	AM 2512 A0
45	65	12	AM 2659 E1
45	68	12	AM 2668 E0
45	72	14	AM 2686 E0
45	75	14	AM 2692 A0
50	72	12	AM 2864 G0
50	75	13	AM 2876 E0
50	77	14	AM 2878 E0
50	80	14	AM 2888 A0
55	78	12	AM 3055 E0
55	80	12	AM 3062 E1
55	82	14	AM 3066 E0
55	85	14	AM 3072 A0
58	80	14	AM 3156 A0
60	82	12	AM 3222 A0
60	87	14	AM 3238 E0
60	90	14	AM 3244 F0
65	92	14	AM 3411 G0
65	95	16	AM 3415 A0
70	86	9	AM 3497 E0
70	92	12	AM 3519 E1
70	100	16	AM 3533 A0
75	100	13	AM 3618 E0
75	105	16	AM 3632 A0
80	105	13	AM 3744 E1
80	110	16	AM 3757 A0
85	110	13	AM 3842 E0
85	115	16	AM 3853 A0
90	120	16	AM 3940 A0
95	125	16	AM 4002 A0
100	130	16	AM 4076 A0

Dimensions			Part Number
Shaft diameter d	Outside diameter D	Width b	Nitrile (NBR) A103 (Press-fit Area: A992) A104 (Press-fit Area: A104)★
100	133	18	AM 4077 E0
100	135	15	AM 4079 F0
105	138	18	AM 4159 E0
105	140	13	AM 4160 A0
105	140	15	AM 4161 E0
105	140	18	AM 4163 E0
110	140	12	AM 4210 E0
110	143	18	AM 4219 E0
110	145	18	AM 4223 A0
115	145	18	AM 4285 A0
115	150	18	AM 4293 E0
120	150	14	AM 4346 E0
120	153	18	AM 4352 E0
120	155	18	AM 4356 A0
125	155	14	AM 4399 E0
125	158	18	AM 4402 E0
125	160	18	AM 4405 A0
130	160	14	AM 4451 E0
130	163	18	AM 4459 F0
130	165	18	AM 4461 A0
135	168	18	AM 4501 E0
135	170	18	AM 4505 A0
140	173	18	AM 4550 F0
140	175	18	AM 4552 A0
140	177	16	AM 4553 E0
145	178	18	AM 4586 E0
145	180	18	AM 4587 A0
150	185	18	AM 4630 A0
150	186	20	AM 4633 E0
155	191	20	AM 4675 A0
160	195	18	AM 4717 A0
160	196	20	AM 4718 E0
165	201	20	AM 4747 A0
170	206	20	AM 4802 F0
170	210	20	AM 4806 A0
175	211	20	AM 4850 A0
180	216	20	AM 4907 H0
180	220	20	AM 4911 A0
190	230	20	AM 4988 A0
195	231	20	AM 5023 A0
200	230	16	AM 5054 E0
200	239	22	AM 5063 F0
200	240	20	AM 5068 A0
210	249	22	AM 5135 A0
210	265	23	AM 5146 E1

General Oil Seals

MG Type

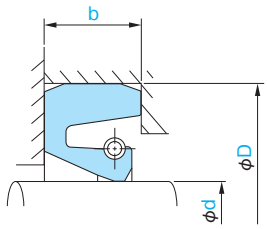

MG type

- The sectional view on the right shows the typical proifle of the seal type.
- Check the guide to allowable operating conditions on pages 12 and 13 for relevant information on the seal selected before use.
- When there is not designation, I send it without a cut. Please refer to page 52 for the cutting methods. If you wish to select a product with a cut in 1 location, we can provide you with a separate quote for such orders.
- If there is an "※" at the end of the part number, as this indicates that an SUS spring specification is available, we ask that you refer to the introduction on SUS spring specifications on page 154.

■When ordering, please indicate the NOK part number and the relevant dimensions.

Order Example NOK Part Number: AM 5171 A0

Type: MG, Shaft diametaer: 215, Outside diameter: 254, Width: 22

Dimensions			Part Number
Shaft diameter d	Outside diameter D	Width b	Nitrile (NBR) A103 (Press-fit Area: A992) A104 (Press-fit Area: A104)★
215	254	22	AM 5171 A0
220	260	20	AM 5215 A0
220	260	22	AM 5216 F0
230	269	22	AM 5287 A0
235	275	22	AM 5320 E0
240	280	20	AM 5352 A0
240	295	25	AM 5359 E0
250	290	20	AM 5407 A0 ※
250	295	24	AM 5408 E0
255	300	24	AM 5440 A0
260	305	22	AM 5465 A0
260	310	24	AM 5467 E0
260	315	24	AM 5469 E0
265	315	24	AM 5490 E0
270	320	24	AM 5521 A0
275	320	24	AM 5537 A0
280	325	22	AM 5565 A0
280	325	24	AM 5566 E0
290	335	24	AM 5591 A0
300	345	22	AM 5631 A0 ※
300	350	25	AM 5635 F0
310	355	24	AM 5672 A0
315	360	20	AM 5689 A0
315	365	25	AM 5694 E0 ※
320	370	25	AM 5717 A0
325	375	25	AM 5737 E0
330	380	25	AM 5750 A0
340	390	25	AM 5782 A0
345	390	25	AM 5803 A0
350	400	25	AM 5817 A0
350	400	25.4	AM 5818 A0 ★
355	405	25	AM 5829 A0
360	405	25	AM 5844 A0 ※
370	420	25	AM 5867 A0
380	440	25	AM 5888 A0 ★※
390	435	25	AM 5907 E0
390	450	25	AM 5909 A0 ★
400	450	25	AM 5927 A0
410	460	25	AM 5953 A0
410	470	25	AM 5955 A0 ★※
420	470	30	AM 5975 A0 ★
430	480	30	AM 5995 A0 ★
440	490	25	AM 6025 A0
450	500	25	AM 6055 A0
455	510	28	AM 6063 E0 ★

★: Lip material is NOK A104

Dimensions			Part Number
Shaft diameter d	Outside diameter D	Width b	Nitrile (NBR) A103 (Press-fit Area: A992) A104 (Press-fit Area: A104)★
460	515	28	AM 6078 A0 ★
470	525	30	AM 6095 A0 ★
475	525	25	AM 6104 A0
480	530	30	AM 6108 A0 ★※
480	540	25	AM 6111 A0 ★
495	545	30	AM 9129 E1 ★
500	550	20	AM 6142 A0 ※
500	560	25	AM 6144 A0 ★
520	570	24	AM 6169 A0
540	590	30	AM 6194 A0 ★※
550	600	25	AM 6205 E1
560	610	30	AM 6224 F1 ★※
570	630	30	AM 9040 A0 ★※
580	630	25	AM 6243 A0
600	650	30	AM 6264 A0 ★
600	670	30	AM 6270 A0 ★
610	660	30	AM 6280 A0 ★
620	670	28	AM 6285 A0 ★
635	705	30	AM 6302 A5 ★
640	702	29	AM 6304 A5 ★※
650	705	20	AM 6312 A0 ★
670	720	25	AM 6330 Z0
680	740	30	AM 6339 A7 ★
690	750	30	AM 6344 A0 ★
700	770	30	AM 6360 A0 ★※
710	760	25	AM 6366 A0
720	780	25	AM 6386 E0 ★※
740	800	25	AM 6399 E1 ★
750	810	30	AM 9603 E0 ★
760	820	25	AM 6420 E1 ★
770	830	30	AM 6436 E1 ★
780	840	30	AM 6447 A5 ★
800	860	30	AM 6458 A6 ★※
830	900	30	AM 6476 A5 ★
870	940	30	AM 6508 A0 ★※
900	950	25	AM 6527 A0 ※
930	1000	30	AM 6540 A5 ★※
1100	1170	30	AM 9761 E0 ★
1270	1334	25	AM 6664 E0 ★
1400	1476.2	19.1	AM 9793 E0 ★

★: Lip material is NOK A104

PTFE Seals

TCJ Type

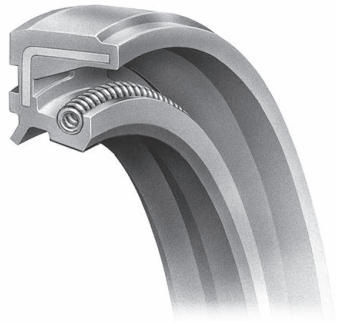

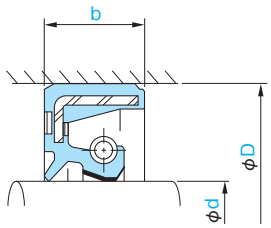

TCJ type

- The sectional view on the right shows the typical proifle of the seal type.
- Please refer to page 25 for the respective advantages and disadvantages of Types B and C.
- Check the guide to allowable operating conditions on pages 14 and 15 for relevant information on the seal selected before use.

■When ordering, please indicate the NOK part number and the relevant dimensions.

Order Example NOK Part Number: GJ 1013 P1
Type: TCJ, Shaft diametaer: 20, Outside diameter: 35, Width: 8

Dimensions			Part Number	
Shaft diameter d	Outside diameter D	Width b	Nitrile (NBR) + (PTFE) A103 + 31BF	Acrylic (ACM) + (PTFE) T303 + 31BF
20	35	8	GJ 1013 P1	GJ 1013 Q0
20	40	11	GJ 1033 P0	—
25	40	8	GJ 1314 P0	GJ 1314 Q0
25	45	11	GJ 1338 P0	GJ 1338 Q0
30	45	8	GJ 1679 P0	GJ 1679 Q0
30	50	11	GJ 1709 P0	GJ 1709 Q0
35	50	8	GJ 2057 P0	GJ 2057 Q0
35	55	11	GJ 2085 P0	GJ 2085 Q0
40	58	8	GJ 2369 P0	GJ 2369 Q0
40	62	11	GJ 2388 P0	GJ 2388 Q0
45	62	9	GJ 2651 P0	GJ 2651 Q0
45	68	12	—	GJ 2668 Q0
50	68	9	GJ 2847 P0	GJ 2847 Q0
50	72	12	GJ 2864 P0	GJ 2864 Q0
55	72	9	GJ 3040 P0	GJ 3040 Q0
55	78	12	GJ 3055 P0	GJ 3055 Q0
60	82	12	GJ 3222 P0	GJ 3222 Q0
65	88	12	GJ 3400 P0	GJ 3400 Q0
70	92	12	GJ 3519 P0	GJ 3519 Q0
70	95	13	GJ 3527 P0	—
75	100	13	GJ 3618 P0	GJ 3618 Q0
80	105	13	GJ 3744 P0	—
85	110	13	GJ 3842 P0	GJ 3842 Q0
90	115	13	GJ 3932 P0	—
95	120	13	GJ 3994 P0	GJ 3994 Q0
100	125	13	GJ 4063 P0	GJ 4063 Q0
105	135	14	GJ 4153 P0	GJ 4153 Q0
110	140	14	GJ 4212 P0	GJ 4212 Q0
115	145	14	GJ 4282 P0	GJ 4282 Q0
120	150	14	GJ 4346 P0	—

[Reference] The lip of this PTFE seal is easily scratched. Handle wtih care. Be sure to refer to beginning on page 30 for information on the design of the shaft and housing.

PTFE Seals

SA1J Type
VAJ Type
KA3J Type

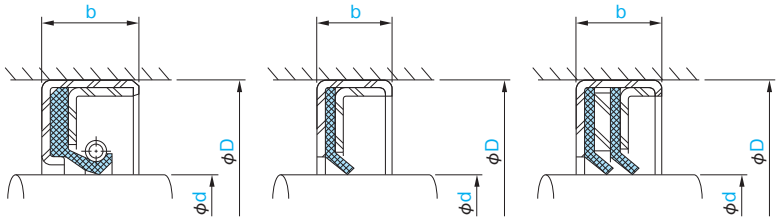

SA1J type　　VAJ type　　KA3J type

- The sectional view on the right shows the typical proifle of the seal type.
- Check the guide to allowable operating conditions on pages 14 and 15 for relevant information on the seal selected before use.

■When ordering, please indicate the NOK part number and the relevant dimensions.

Order Example　NOK Part Number: GJ 1033 E0
Type: VAJ, Shaft diametaer: 20, Outside diameter: 40, Width: 11

Dimensions			Part Number		
			PTFE 31BF		
Shaft diameter d	Outside diameter D	Width b	SA1J type	VAJ type	KA3J type
20	40	11	—	GJ 1033 E0	GJ 1033 F0
25	45	11	—	—	GJ 1338 H0
28	48	11	—	—	GJ 1563 F0
30	50	11	GJ 1709 H0	GJ 1709 I0	GJ 1709 E1
32	52	11	—	—	GJ 1904 G0
35	55	11	GJ 2085 F0	GJ 2085 H0	GJ 2085 I0
40	62	11	—	GJ 2388 H0	GJ 2388 I0
42	65	12	—	GJ 2507 F0	GJ 2507 G0
45	68	12	GJ 2668 F2	GJ 2668 I0	GJ 2668 J0
50	72	12	GJ 2864 H2	GJ 2864 I0	GJ 2864 J0
55	78	12	GJ 3055 I1	GJ 3055 K0	GJ 3055 F0
60	82	12	GJ 3222 J2	GJ 3222 K0	GJ 3222 I0
62	85	12	GJ 3297 H0	—	—
65	90	13	GJ 3409 F0	GJ 3409 G0	GJ 3409 H0
70	95	13	GJ 3527 F0	GJ 3527 H0	GJ 3527 G0
75	100	13	GJ 3618 J1	GJ 3618 K0	GJ 3618 L0
80	105	13	GJ 3744 J5	GJ 3744 G1	GJ 3744 H0
85	110	13	GJ 3842 J1	—	GJ 3842 I0
90	115	13	GJ 3932 E2	GJ 3932 J0	GJ 3932 K0
95	120	13	GJ 3994 G4	—	GJ 3994 K0
100	125	13	GJ 4063 J0	GJ 4063 H0	GJ 4063 I0
105	135	14	GJ 4153 L0	GJ 4153 E2	—
110	140	14	GJ 4212 T0	—	—
115	145	14	GJ 4282 F2	—	GJ 4282 H0
120	150	14	GJ 4346 S0	—	GJ 4346 I0
125	155	14	GJ 4399 H0	—	GJ 4399 G0
130	160	14	GJ 4451 J0	GJ 4451 G0	GJ 4451 H0
135	165	14	GJ 4498 J1	GJ 4498 I0	—
140	170	14	GJ 4542 I0	—	GJ 4542 F1
145	175	14	GJ 4581 H0	—	—
150	180	14	GJ 4624 J0	GJ 4624 I0	—
160	190	16	GJ 4713 H0	GJ 4713 F0	—
170	200	16	GJ 4795 G0	—	—
180	210	16	GJ 4898 H0	—	GJ 4898 E0
190	225	16	GJ 4983 G0	—	—
200	240	20	GJ 5068 I0	—	—

[Reference] The lip of this PTFE seal is easily scratched. Handle wtih care. Be sure to refer to beginning on page 30 for information on the design of the shaft and housing.

SUS Spring Specifications

- We have prepared SUS spring specifications for our catalog product lineup.
- We ask that you make sure to check the cross-section diagrams for each of the individual models.
- Check the guide to allowable operating conditions on pages 10 through 15 for relevant information on the seal selected before use.
- Please refer to page 25 for the respective advantages and disadvantages of Types B and C.
- Please check page 23 for information on "Types and Applications of Garter Spring and Metal Case Materials."
- Please note that part numbers that are listed in the model dimension tables for each model that are marked with an "※" will differ with the part numbers listed for SUS spring specification products. Please use the part numbers listed on this page when ordering SUS spring specification parts.

■When ordering, please indicate the NOK part number, the relevant dimensions, materials, and garter spring materials.

Order Example 1 NOK Part Number: AC 0598 E4
Type: SC, Shaft diametaer: 15, Outside diameter: 30, Width: 7, Material Symbol: F585, Garter spring material: 304

Order Example 2 NOK Part Number: AP 02864 A0B
Type: TCV, Shaft diametaer: 50, Outside diameter: 72, Width: 12, Material Symbol: A795, Garter spring material: 316

Types	Dimensions			Material	Material Symbol	Metal case material	Garter spring material	Part Number (SUS Spring Specification)
	Shaft diameter d	Outside diameter D	Width b					
SC	8	18	7	NBR	A727	SPCC	304	AC 0145 E1
	10	21	8	NBR	A727	SPCC	304	AC 0267 E1
	14	28	7	NBR	A727	SPCC	304	AC 0526 A5
	15	30	7	FKM	F585	SPCC	304	AC 0598 E4
	15	28	7	NBR	A727	SPCC	304	AC 0592 E0
	15	30	7	NBR	A727	SPCC	304	AC 0598 A4
	15	32	7	NBR	A727	SPCC	304	AC 00603 E1A
	16	30	7	NBR	A727	SPCC	304	AC 0687 A4
	17	30	7	FKM	F585	SPCC	304	AC 00743 F1A
	17	30	6	NBR	A727	SPCC	304	AC 0742 E2
	17	32	7	NBR	A727	SPCC	304	AC 0750 E3
	18	35	7	NBR	A727	SPCC	304	AC 0828 E1
	19	35	8	FKM	F585	SPCC	304	AC 00875 F1A
	20	45	12	NBR	A727	SPCC	316	AC 1045 E1
	20	32	8	NBR	A727	SPCC	304	AC 0997 E1
	22	38	12	NBR	A727	SPCC	316	AC 1136 E2
	24	40	8	NBR	A727	SPCC	304	AC 1260 A4
	26	42	8	NBR	A727	SPCC	304	AC 1474 A4
	30	45	9	FKM	F585	SPCC	304	AC 1680 E4
	30	42	8	NBR	A727	SPCC	304	AC 1666 E3
	30	45	8	NBR	A727	SPCC	304	AC 1679 G1
	30	50	11	NBR	A727	SPCC	304	AC 1709 A4
	32	44	9	NBR	A727	SPCC	304	AC 1871 G0
	35	50	8	NBR	A727	SPCC	304	AC 2057 A6
	38	58	11	FKM	F585	SPCC	304	AC 02240 E3A
	40	52	8	NBR	A727	SPCC	304	AC 02343 E6A
	40	62	11	NBR	A727	SPCC	304	AC 2388 A4
	45	68	12	NBR	A727	SPCC	304	AC 2668 A9
	50	68	9	NBR	A727	SPCC	304	AC 2847 E1
	55	72	9	NBR	A727	SPCC	304	AC 3040 A5
	55	78	12	NBR	A727	SPCC	304	AC 3055 A4
	62	85	12	NBR	A727	SPCC	304	AC 3297 A5
	65	85	10	NBR	A727	SPCC	316	AC 3394 E2
	70	92	12	NBR	A727	SPCC	304	AC 3519 A7
	72	100	12	NBR	A727	SPCC	304	AC 3562 E1
	80	105	13	FKM	F585	SPCC	304	AC 3744 I0
	80	100	10	NBR	A727	SPCC	304	AC 3732 E7
	85	110	13	NBR	A727	SPCC	304	AC 3842 G4
	90	115	13	NBR	A727	SPCC	316	AC 3932 J3
	90	115	13	NBR	A727	SPCC	304	AC 3932 A8
	100	125	13	NBR	A727	SPCC	316	AC 4063 G9
	100	125	13	NBR	A727	SPCC	304	AC 4063 G4
	105	135	14	NBR	A727	SPCC	304	AC 4153 F1
	110	140	14	FKM	F585	SPCC	304	AC 4212 F8
	110	140	14	NBR	A727	SPCC	304	AC 4212 E1

SUS Spring Specifications

- We have prepared SUS spring specifications for our catalog product lineup.
- We ask that you make sure to check the cross-section diagrams for each of the individual models.
- Check the guide to allowable operating conditions on pages 10 through 15 for relevant information on the seal selected before use.
- Please refer to page 25 for the respective advantages and disadvantages of Types B and C.
- Please check page 23 for information on "Types and Applications of Garter Spring and Metal Case Materials."
- Please note that part numbers that are listed in the model dimension tables for each model that are marked with an "※" will differ with the part numbers listed for SUS spring specification products. Please use the part numbers listed on this page when ordering SUS spring specification parts.

■When ordering, please indicate the NOK part number, the relevant dimensions, materials, and garter spring materials.

Order Example 1 NOK Part Number: AC 0598 E4
Type: SC, Shaft diametaer: 15, Outside diameter: 30, Width: 7, Material Symbol: F585, Garter spring material: 304

Order Example 2 NOK Part Number: AP 02864 A0B
Type: TCV, Shaft diametaer: 50, Outside diameter: 72, Width: 12, Material Symbol: A795, Garter spring material: 316

Types	Dimensions			Material	Material Symbol	Metal case material	Garter spring material	Part Number (SUS Spring Specification)
	Shaft diameter d	Outside diameter D	Width b					
SC	120	150	14	NBR	A727	SPCC	304	AC 04346 F0B
	130	160	14	NBR	A727	SPCC	304	AC 4451 F0
	150	180	14	FKM	F585	SPCC	304	AC 04624 G7A
	150	180	14	NBR	A727	SPCC	304	AC 4624 E0
	160	200	15	FKM	F585	SPCC	304	AC 4720 E2
	180	210	15	NBR	A941	SPCC	316	AC 04897 F5A
	190	220	15	NBR	A941	SPCC	316	AC 04975 E6A
	200	240	20	NBR	A941	SPCC	304	AC 5068 E5
SB	60	80	10	NBR	A727	SPCC	304	AB 03211 E1A
	105	135	14	FKM	F585	SPCC	304	AB 04153 A7A
	110	140	14	FKM	F585	SPCC	316	AB 04212 A7A
	190	220	15	NBR	A941	SPCC	304	AB 04975 E2A
	220	260	22	FKM	F585	SPCC	304	AB 05216 A0B
	230	260	20	FKM	F585	SPCC	304	AB 05283 A9A
	240	280	19	FKM	F585	SPCC	304	AB 05351 A1B
	250	280	15	NBR	A941	SPCC	304	AB 5398 G0
TC	10	25	7	NBR	A727	SPCC	316	AE 00279 A0B
	10	25	7	NBR	A727	SPCC	304	AE 0279 A7
	10	20	7	NBR	A727	SPCC	304	AE 0260 J1
	12	25	7	NBR	A727	SPCC	304	AE 0382 A4
	12	28	7	NBR	A727	SPCC	304	AE 0387 E9
	12	32	7	NBR	A727	SPCC	304	AE 0399 E5
	14	25	7	NBR	A727	SPCC	316	AE 00519 E2A
	14	25	7	NBR	A727	SPCC	304	AE 0519 E1
	14	28	7	NBR	A727	SPCC	304	AE 00526 A0B
	15	35	8	NBR	A727	SPCC	304	AE 0611 E0
	16	30	7	NBR	A727	SPCC	304	AE 00687 A9A
	18	32	7	NBR	A727	SPCC	304	AE 0823 E2
	19	32	8	NBR	A727	SPCC	304	AE 0870 E1
	20	32	8	NBR	A727	SPCC	304	AE 00997 E5A
	20	40	8	NBR	A727	SPCC	304	AE 01030 E3A
	22	42	10	NBR	A727	SPCC	304	AE 1147 E1
	25	40	8	FKM	F585	SPCC	316	AE 1314 J4
	25	38	7	NBR	A727	SPCC	304	AE 1306 K3
	25	40	8	NBR	A727	SPCC	304	AE 1314 A4
	25	45	8	NBR	A727	SPCC	304	AE 1335 E1
	26	42	8	NBR	A727	SPCC	304	AE 01474 A4A
	30	45	8	NBR	A727	SPCC	304	AE 1679 A6
	30	50	7	NBR	A727	SPCC	304	AE 1704 E1
	30	50	11	NBR	A727	SPCC	304	AE 1709 A9
	32	48	8	NBR	A727	SPCC	304	AE 1894 G1
	35	50	7	NBR	A727	SPCC	304	AE 2056 E1
	35	50	8	NBR	A727	SPCC	304	AE 2057 A5
	35	52	8	NBR	A727	SPCC	304	AE 2067 E2

SUS Spring Specifications

- We have prepared SUS spring specifications for our catalog product lineup.
- We ask that you make sure to check the cross-section diagrams for each of the individual models.
- Check the guide to allowable operating conditions on pages 10 through 15 for relevant information on the seal selected before use.
- Please refer to page 25 for the respective advantages and disadvantages of Types B and C.
- Please check page 23 for information on "Types and Applications of Garter Spring and Metal Case Materials."
- Please note that part numbers that are listed in the model dimension tables for each model that are marked with an "※" will differ with the part numbers listed for SUS spring specification products. Please use the part numbers listed on this page when ordering SUS spring specification parts.

■When ordering, please indicate the NOK part number, the relevant dimensions, materials, and garter spring materials.

Order Example 1 NOK Part Number: AC 0598 E4
Type: SC, Shaft diametaer: 15, Outside diameter: 30, Width: 7, Material Symbol: F585, Garter spring material: 304

Order Example 2 NOK Part Number: AP 02864 A0B
Type: TCV, Shaft diametaer: 50, Outside diameter: 72, Width: 12, Material Symbol: A795, Garter spring material: 316

Types	Dimensions			Material	Material Symbol	Metal case material	Garter spring material	Part Number (SUS Spring Specification)
	Shaft diameter d	Outside diameter D	Width b					
TC	40	55	8	NBR	A727	SPCC	304	AE 2359 H1
	40	58	8	NBR	A727	SPCC	304	AE 2369 G0
	40	62	12	NBR	A727	SPCC	304	AE 2390 K3
	40	63	7	NBR	A727	SPCC	304	AE 02396 F2A
	45	60	9	NBR	A727	SPCC	304	AE 2643 E2
	45	62	9	NBR	A727	SPCC	304	AE 2651 A4
	50	72	12	NBR	A727	SPCC	316	AE 2864 A5
	50	68	9	NBR	A727	SPCC	304	AE 2847 A5
	50	72	9	NBR	A727	SPCC	304	AE 2861 E0
	50	72	10	NBR	A727	SPCC	304	AE 2862 E0
	50	72	12	NBR	A727	SPCC	304	AE 2864 A4
	55	72	9	NBR	A727	SPCC	304	AE 3040 A8
	60	82	12	FKM	F585	SPCC	304	AE 3222 G9
	65	90	13	FKM	F585	SPCC	304	AE 3409 F1
	80	105	13	NBR	A727	SPCC	304	AE 03744 A0B
	100	125	13	NBR	A727	SPCC	304	AE 4063 F3
	105	135	14	NBR	A727	SPCC	304	AE 4153 E3
	130	160	14	NBR	A727	SPCC	304	AE 4451 F2
	140	170	14	NBR	A727	SPCC	304	AE 4542 E1
	170	200	16	NBR	A941	SPCC	316	AE 4795 E4
	200	230	15	NBR	A941	SPCC	316	AE 5053 E3
TB	95	120	13	NBR	A727	SPCC	304	AD 3994 G1
	105	135	14	NBR	A727	SPCC	304	AD 4153 A9
	110	140	14	NBR	A727	SPCC	304	AD 4212 H0
	120	150	14	FKM	F585	SPCC	304	AD 4346 A8
	120	150	14	VMQ	S728	SPCC	304	AD 4346 J0
	130	160	14	NBR	A727	SPCC	304	AD 4451 N0
	135	175	16	NBR	A727	SPCC	304	AD 4506 E1
	230	260	20	NBR	A941	SPCC	304	AD 05283 A5A
TCZ	45	68	9	NBR	A795	SPCC	304	AP 2666 F2
TCV	8	18	7	NBR	A795	SPCC	304	AP 0145 E1
	10	25	7	NBR	A795	SPCC	304	AP 00279 E4A
	12	25	7	NBR	A795	SPCC	304	AP 0382 E2
	15	30	7	FKM	F548	SPCC	304	AP 00598 F7A
	16	30	7	NBR	A795	SPCC	304	AP 0687 F3
	26	42	8	NBR	A795	SPCC	304	AP 1474 F1
	30	50	11	NBR	A795	SPCC	304	AP 1709 A7
	35	55	11	NBR	A795	SPCC	304	AP 2085 A4
	50	72	12	NBR	A795	SPCC	316	AP 02864 A0B
	50	72	12	NBR	A795	SPCC	304	AP 2864 A7
	55	78	12	NBR	A795	SPCC	304	AP 3055 G5
TC4	20	35	7	NBR	A795	SPCC	304	AR 01012 F4A
	22	40	10	NBR	A795	SPCC	304	AR 1140 E2
OC	95	120	13	NBR	A727	SPCC	304	AO 3994 F1

SUS Spring Specifications

- We have prepared SUS spring specifications for our catalog product lineup.
- We ask that you make sure to check the cross-section diagrams for each of the individual models.
- Check the guide to allowable operating conditions on pages 10 through 15 for relevant information on the seal selected before use.
- Please refer to page 25 for the respective advantages and disadvantages of Types B and C.
- Please check page 23 for information on "Types and Applications of Garter Spring and Metal Case Materials."
- Please note that part numbers that are listed in the model dimension tables for each model that are marked with an "※" will differ with the part numbers listed for SUS spring specification products. Please use the part numbers listed on this page when ordering SUS spring specification parts.

■When ordering, please indicate the NOK part number, the relevant dimensions, materials, and garter spring materials.

Order Example 1 NOK Part Number: AC 0598 E4
Type: SC, Shaft diametaer: 15, Outside diameter: 30, Width: 7, Material Symbol: F585, Garter spring material: 304

Order Example 2 NOK Part Number: AP 02864 A0B
Type: TCV, Shaft diametaer: 50, Outside diameter: 72, Width: 12, Material Symbol: A795, Garter spring material: 316

Types	Dimensions			Material	Material Symbol	Metal case material	Garter spring material	Part Number (SUS Spring Specification)
	Shaft diameter d	Outside diameter D	Width b					
SBB	320	360	25	NBR	A941	SPCC	304	AB 5712 A7
	430	470	20	NBR	A941	SPCC	304	AB 5993 F0
	450	510	25	NBR	A941	SPCC	304	AB 06057 A0B
	630	670	20	NBR	A941	SPCC	304	AB 6292 F5
	650	710	25	NBR	A941	SPCC	304	AB 6313 E1
	673.1	711.2	19	NBR	A941	SPCC	304	AB 6335 E6
	710	760	25	NBR	A941	SPCC	304	AB 6366 E2
Large-diameter SB	330	390	25	NBR	A941	SPCC	304	AB 5753 A4
	430	480	25	NBR	A941	SPCC	304	AB 05994 E4A
	450	480	17.5	NBR	A941	SPCC	304	AB 6046 E5
	600	660	25	NBR	A941	SPCC	304	AB 06267 A0B
	780	830	25	NBR	A941	SPHC	304	AB 06446 A0B
	800	870	25	NBR	A941	SPHC	304	AB 6459 A7
Large-diameter TB	425	475	22	NBR	A941	SPCC	304	AD 5984 E2
MG	250	290	20	NBR	A103 ◎		316	AM 5407 A5
	300	345	22	NBR	A103 ◎		304	AM 5631 A4
	315	365	25	NBR	A103 ◎		304	AM 5694 E1
	360	405	25	NBR	A103 ◎		304	AM 5844 A4
	380	440	25	NBR	A104		316	AM 5888 A7
	410	470	25	NBR	A104		316	AM 5955 A6
	480	530	30	NBR	A104		316	AM 6108 A2
	500	550	20	NBR	A103 ◎		316	AM 6142 A4
	540	590	30	NBR	A104		316	AM 6194 A4
	560	610	30	NBR	A104		316	AM 6224 F2
	570	630	30	NBR	A104		316	AM 9040 A1
	640	702	29	NBR	A104		316	AM 6304 A5
	700	770	30	NBR	A104		316	AM 6360 A1
	720	780	25	NBR	A104		316	AM 6386 E1
	800	860	30	NBR	A104		316	AM 6458 A7
	870	940	30	NBR	A104		316	AM 6508 A4
	900	950	25	NBR	A103 ◎		316	AM 6527 A6
	930	1000	30	NBR	A104		304	AM 6540 A4

◎: Nitrile (NBR) A103 (Press-fit Area: A992)

Le-μ's: LOW FRICTION(μ) SEALS

Introducing Our New Technologies

Since these are specially designed parts, we ask that you please contact us for more details.

©NOK CORPORATION Printed in Japan

Overseas Sales & Marketing Department Sales & Marketing Division
1-12-15 Shiba Daimon, Minato-ku, Tokyo, Japan. Zipcord 105-8585.

The contents is subject to change without notice.

All compatibility data, application information, design & material information and technical data in this catalogue are compiled as a reference material to make a basic packing selection.
A selected standard design from this catalogue may not comform to the actual use of an application, clue to unknown factors in the application.
Please comfirm the actual compatibility of a selected product with your application before using it.